Dispatchable Energy Technology and Plant Control (a Primer)

Ian Baring-Gould
National Renewable Energy Laboratory

Power Generation Options

Reciprocating Engines

Microturbines

Fuel Cells

Diesel Generator - The Basic System

Switch gear / System control

Power wires

Exhaust

Diesel engine

Water cooling

Monitoring and control

Starting batteries

Generator

Fuel day tank

Emergency shutoff

Diesel Generators

Why do we use them - diesel engines make great prime movers

- Reliable
- Efficient
- Well understood / Strongly developed
- Fuel is easily transported, stored, and has high energy density

But they are not perfect

- Fuel must be transported and stored (Extra costs)
- Environmental damage from the plant and fuel transport
- Expensive and variable cost of diesel fuel (tagged to price of oil and demand)
- Produces emissions – CO2, NOx, particulate matter

Photo credit: Josh Landia – National Science Foundation

Photo credit: Mia Devine

TOM'S SHELL
Self Serve
Cash or Credit
Regular
ARM 9
Plus
LEG 9
Premium
First Born 9

Diesel Emission Curve Example

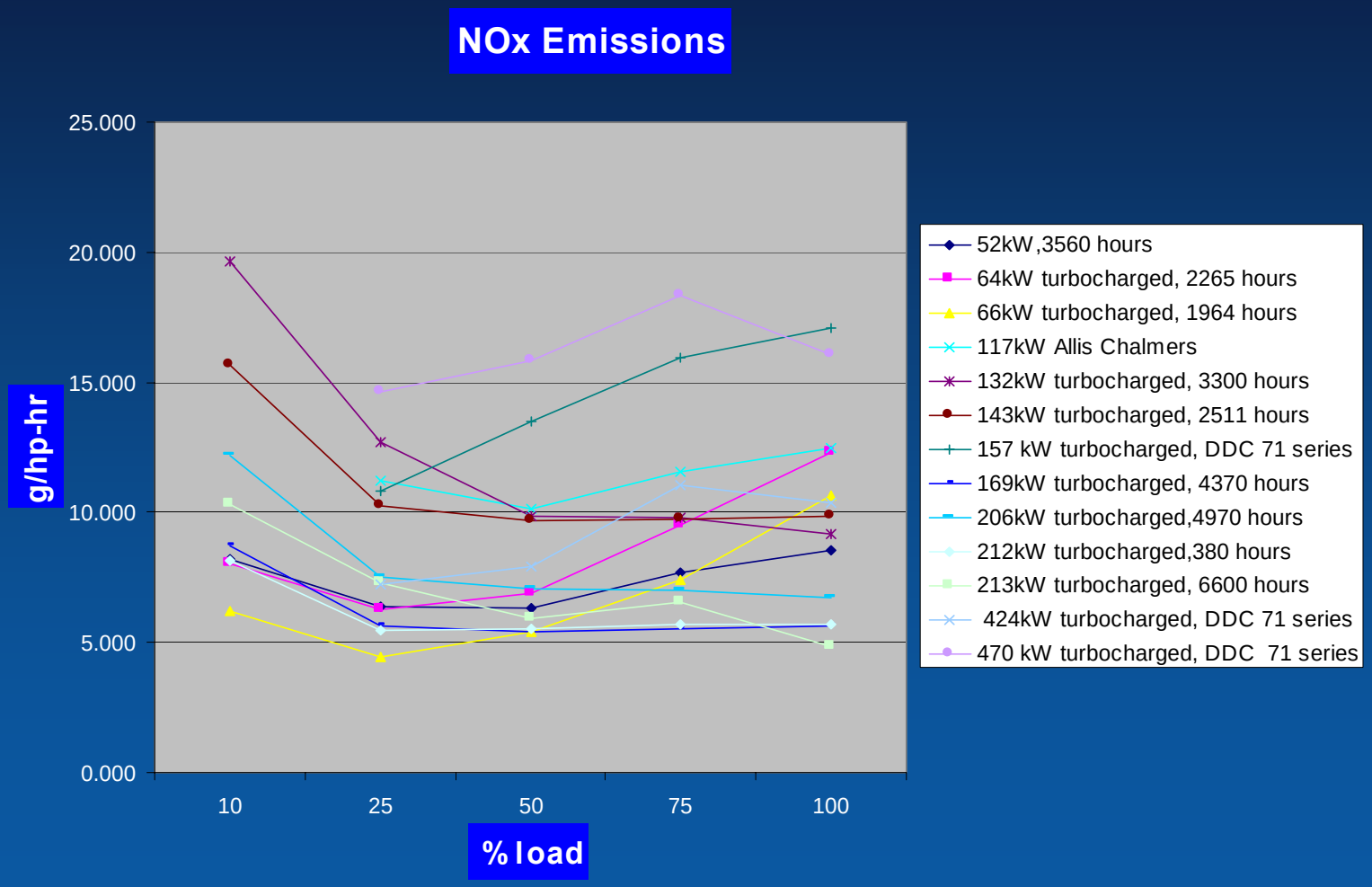

Diesel Ratings

There are internationally agreed definitions of the rating levels for diesel engines:

- Standby - Output available with varying load for the duration of the normal source of electrical supply. In essence it is the "prime overload" condition with no time limit for an engine which is normally not operated.
- Prime - Output available with varying load between 25% and 100% of the rating for an unlimited time. The unit can be overloaded to 110% of the rating for one hour in twelve.
- Continuous - Output available without varying the load for an unlimited time.

If the standby rating were 1000 kW, then a Prime Power rating might be 850 kW, and the continuous rating 800kW.

Diesel Speeds

Multiple generator speeds available – primarily the lower the speed, the larger and longer lasting the unit -

- 600 RPM (60Hz) – Low speed
- 1200 or 1800 RPM (60Hz) – Medium speed
- 3600 RPM (60Hz) – High speed

Variation in Fuel Use

Fuel use with most generators is quite linear, with values typically given at several specific loading levels – New diesels have better lower load efficiency.

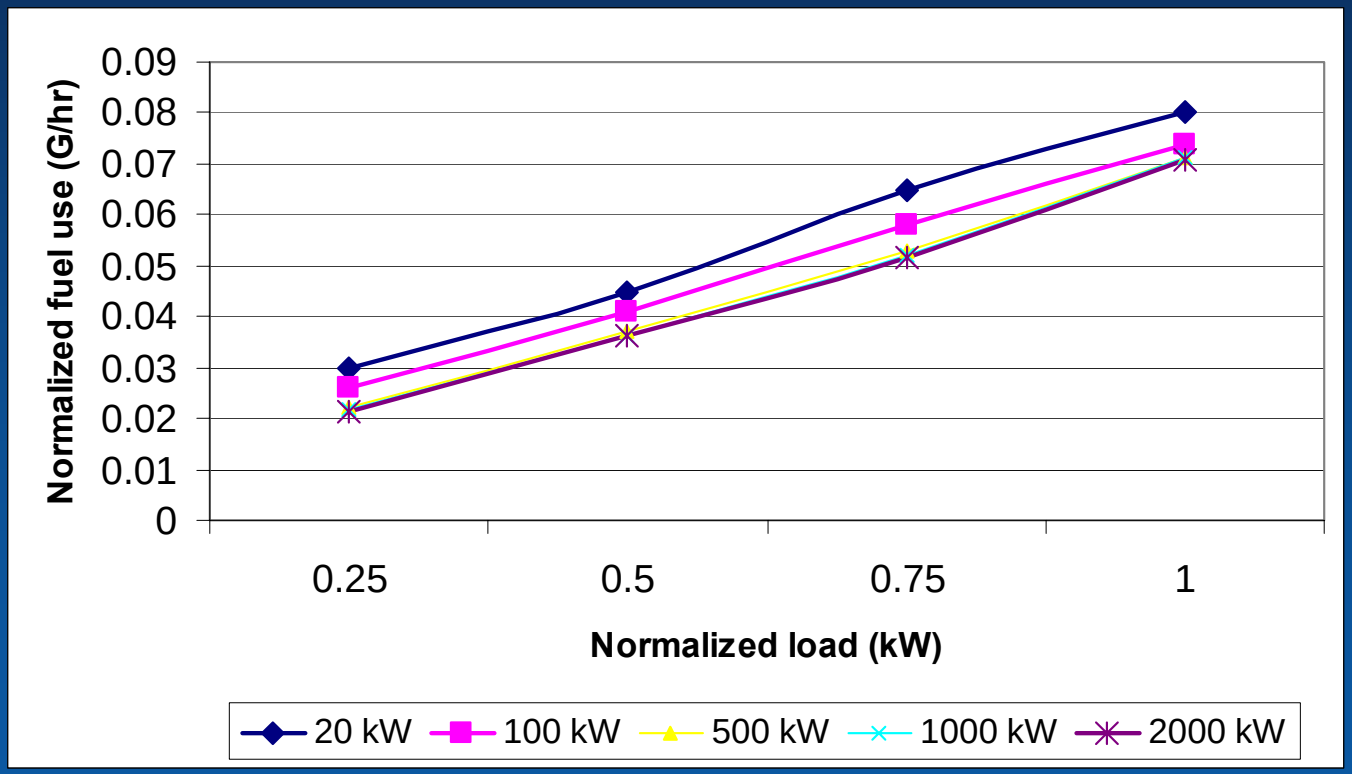

Diesel Engines – Fuel & Other Information

Plant efficiency is generally measured in kW/gal (kWh/l) fuel use

As a good rule, a well managed plant will get between 13-14 kWh/gal of fuel

Generator Size (kW)	1/4 Load (gal/hr)	1/2 Load (gal/hr)	3/4 Load (gal/hr)	Full Load (gal/hr)
20	0.6	0.9	1.3	1.6
30	1.3	1.8	2.4	2.9
40	1.6	2.3	3.2	4.0
60	1.8	2.9	3.8	4.8
[illegible]	[illegible]	[illegible]	4.6	6.1
[illegible]	[illegible]	[illegible]	5.8	7.4
[illegible]	[illegible]	[illegible]	7.1	9.1
[illegible]	[illegible]	[illegible]	7.6	9.8
[illegible]	[illegible]	[illegible]	8.4	10.9
[illegible]	[illegible]	[illegible]	9.7	12.7
[illegible]	[illegible]	[illegible]	11.0	14.4
[illegible]	[illegible]	[illegible]	12.5	16.6
[illegible]	[illegible]	[illegible]	13.6	18.0
[illegible]	[illegible]	[illegible]	16.1	21.5

DIESEL GENERATOR SET

CATERPILLAR®

Image shown may not reflect actual package.

STANDBY
1100 ekW 1375 kVA
60 Hz 1800 rpm 480 Volts

Caterpillar is leading the power generation marketplace with Power Solutions engineered to deliver unmatched flexibility, expandability, reliability, and cost-effectiveness.

FEATURES

FUEL STRATEGY
- Low Fuel Consumption

UL 2200
- UL 2200 Listed configuration available

FULL RANGE OF ATTACHMENTS
- Wide range of bolt-on system expansion attachments, factory designed and tested

DESIGN CRITERIA
- The generator set accepts rated load in one step

WORLDWIDE PRODUCT SUPPORT
- Caterpillar® dealers provide extensive post sale support including maintenance and repair agreements
- Caterpillar dealers fill 99.7% of parts orders within 24 hours
- Caterpillar dealers have over 1,798 dealer branch stores operating in 200 countries
- The Cat® S•O•S™ program cost effectively detects internal engine component condition, even the presence of unwanted fluids and combustion by-products

CAT 3512 TA DIESE
- Reliable, rugged, durab
- Field-proven in thousar worldwide
- Four-stroke-cycle diese consistent performanc economy with minimu
- UL 2200 Listed package restrictions may apply. Caterpillar dealer

CAT SR4B GENERA
- Matched to the perform characteristics of Cater
- Optimum winding pitch harmonic distortion an
- Single point access to a
- UL 1446 recognized Cla

CAT EMCP3 CONTROLS
- Controls designed to m needs:
- EMCP 3 provides the o power metering and pr
- Segrated low voltage, provides single point a connections

STANDBY 1100 ekW 1375 kVA
60 Hz 1800 rpm 480 Volts

CATERPILLAR®

FACTORY INSTALLED STANDARD & OPTIONAL EQUIPMENT

System	Standard	Optional
Air Inlet	• Single element canister type air cleaner with pre-cleaners (with pre-cleaners) • Service indicator	• Dual element & heavy duty air cleaners (with pre-cleaners) • Air inlet adapters & shutoff
Cooling	• Radiator with guard (40°C) • Low profile with (frontal area) • Low Airflow • Coolant drain line with valve • Fan and belt guards • Caterpillar Extended Life Coolant • Low coolant level • Radiator duct flange • Not included with packages without radiators	• Radiator with 27°C and 50°C ambient capability • Radiator option for 57°C ambient with treated water • Radiator removal • Heavy duty, harsh enviroment radiator at 43°C and 50°C • Heat exchanger and expansion tank • Coolant level switch gauge • Jacket water heater
Exhaust	• Dry exhaust manifold • Flanged faced outlets	• Mufflers and Silencers • Stainless steel exhaust flex fittings • Elbows, flanges, expanders & Y adapters
Fuel	• Secondary fuel filters • Fuel priming pump • Flexible fuel lines • Fuel cooler* *Not included with packages without radiators	• Water separator • Duplex fuel filter
Power Termination	• Bus-bar (NEMA and IEC mechanical lug holes) - right side standard • Top and bottom cable entry	• Circuit breakers, UL listed, 3 pole with shunt trip, 80% or 100% rated, choice of trip units, manual or electrically operated (low voltage only) • Circuit breakers, IEC compliant, 3 or 4 pole with shunt trip (low voltage only),choice of trip units, manual or electrically operated • Shroud cover for bottom cable entry • Power termination can be located on the left and/or rear as an option. Also, multiple circuit breakers can be ordered (up to 3)
Generator	• Permanent magnet excited • Class H insulation • Class F temperature (105°C prime/130°C standby) • Winding temperature detectors • Anti-condensation space heaters	• Oversize & premium generators
Governor	• Woodward 2301A isochronous	• Load share governor
Control Panels	• User Interface panel (UIP) - rear mount • EMCP 3.1 Genset controller • Voltage and speed adjust • AC&DC customer wiring area (right side) • CAT digital voltage regulator (CDVR) with KVAR/PF control, 3-phase sensing • Reactive droop • Emergency stop pushbutton	• EMCP 3.3 • Option for right or left mount UIP • Option for rear or left mount Customer wiring area • Local & remote annunciator modules • Load share module • Discrete I/O Module • Generator temperature monitoring & protection
Lube	• Lubricating oil and filter • Oil drain line with valves • Fumes disposal • Gear type lube oil pump	• Oil level regulator • Deep sump oil pan • Electric & air prelube pumps • Manual prelube with sump pump • Duplex oil filter
Mounting	• Structural steel base • Anti-vibration mounts (shipped loose)	• Isolator removal • Spring type isolator, zone 4
Starting/Charging	• 24 volt starting motor(s) • Batteries with rack and cables • Battery disconnect switch	• Battery chargers (10 or 20 Amp) • 45 amp charging alternator • Oversize batteries • Ether starting aids • Heavy duty starting motors • Barring device (manual) • Air starting motor with control & silencer
Note	Standard and optional equipment may vary for UL 2200 Listed Packages. UL 2200 Listed packages may have oversized generators with a different temperature rise and motor starting characteristics.	

Diesel Only Power System

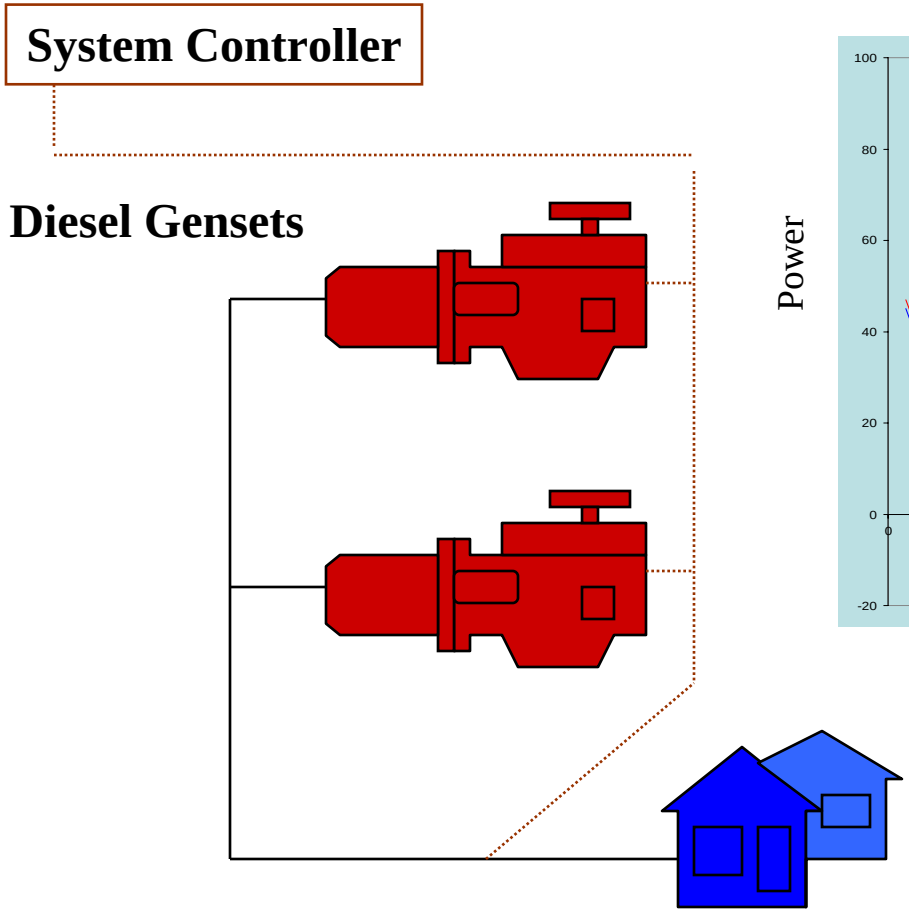

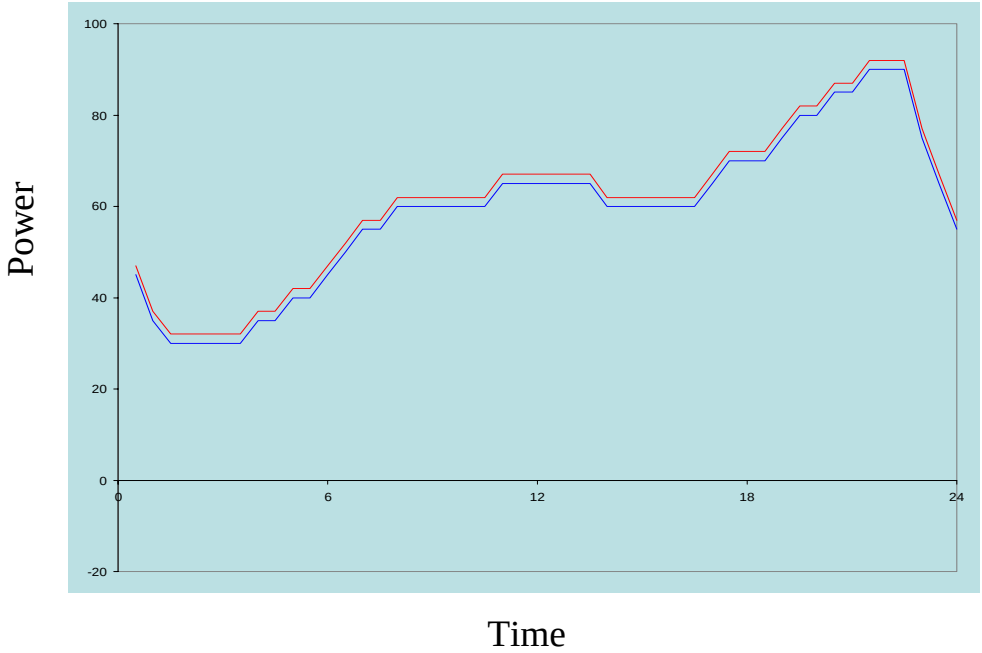

Elements of Power Quality

- Power reliability: Having power when you should have it.
  - System failures / Unscheduled blackouts
- Power quality: Is the power supplied good enough for the needs.
  - Voltage and frequency within acceptable limits
  - Ability to supply reactive power needed for motors
  - Harmonic distortion – is the sub-cycle quality of the power acceptable to loads

Power Reliability

Is the power reliable?

- Driven by system maintenance, designed component redundancy, proper plant control and having enough capacity on line to meet the load
- All of these are factors that impact diesel plant reliability now - plant design, equipment age, and experience of station staff play a large part in ensuring operation
- Adding wind technology adds more components and makes the task more complicated
  - Clearly depends on the penetration of the system
  - More/new equipment to maintain
  - New processes and operational considerations
  - More complicated plant management and seasonal dispatch

Power Quality

If the power quality is poor, some loads will be negatively impacted and eventually the power plant or generators will trip off line – meaning that the lights will go out.

The prime elements of concern are

- **Voltage:** Amplitude of the power wave form. Generally maintained by the manipulating the electric field of rotating equipment (like generators or synchronous condensers) but can also controlled using solid state devices such as power control units.
- **Frequency:** Maintaining a balance of power supply and demand; to much power the frequency goes up, not enough and the frequency goes down. Generally controlled by the throttle of the diesel but can be implemented through combination of thermal loads, dispatchable loads, and power storage.

Power Quality – Continued

- **Power Factor maintenance & Reactive Power supply (VAR Support):** All impedance devices (motors, florescent lighting, electronics) require both active and reactive power. The power system must be able to provide reactive power and balance power factor. Normally done by the diesel but can be assisted or replaced by capacitor banks, synchronous condensers, or advanced solid state power converters.
- **Harmonics Distortion:** The quality of the power that comes down the line and can impact electronic devices. Most rotating machinery provide high quality power harmonics (the power is very smooth) but the addition of more low quality loads and low quality electronics can increase distortion. This is generally addressed in the selection of power electronic equipment employed in the design of the power systems and continued assessment/tuning.

Maintaining High Power Quality

- Maintaining a high level of power quality is dependent on obtaining ways to control what is happening.
- Depends on
  - Configuration
  - Type and age of equipment
  - System integration

Generator Power Quality Control

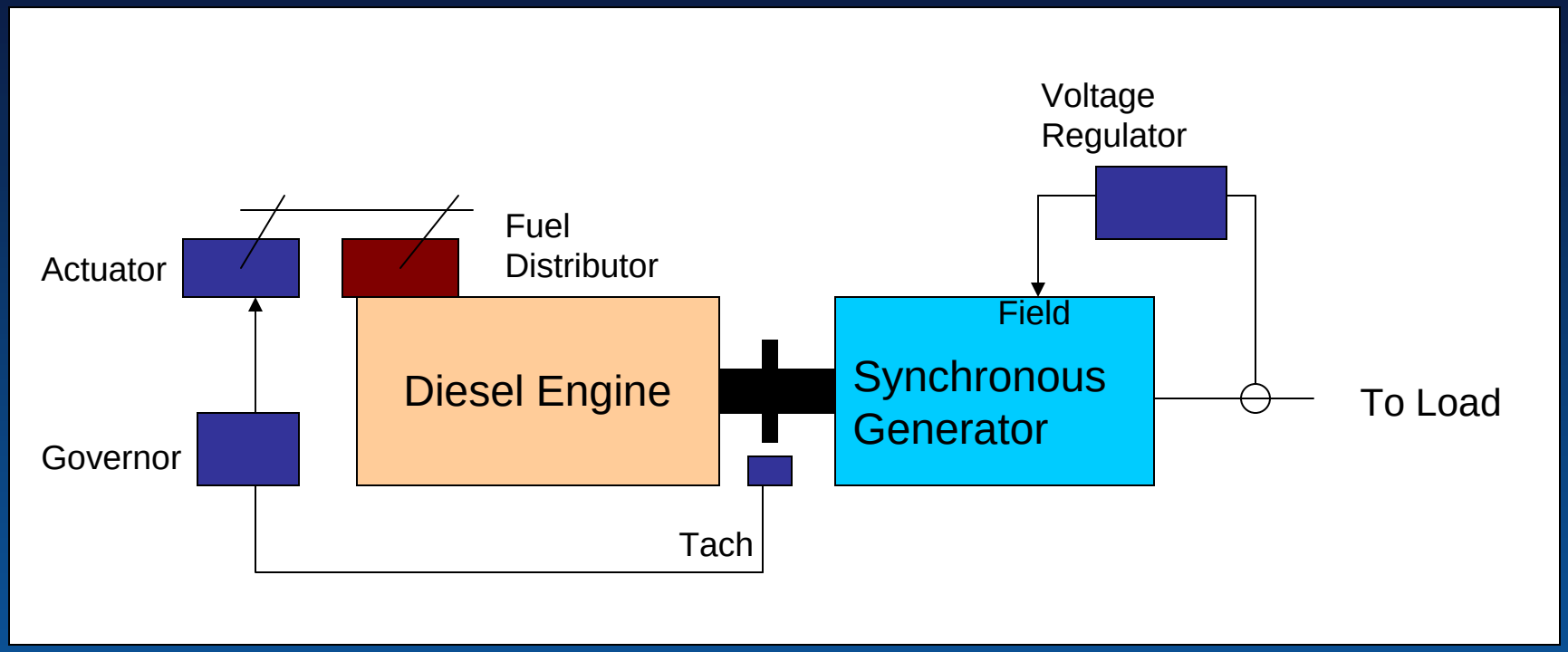

Frequency Control

Voltage and VAR support Control

Criteria to Operate Diesel Engine

Need to keep a generator warm or must get warm before loading

Maintain minimum load levels – low loads mean low operating temperatures – which lead to:

- Increased corrosion (corrosives gas and high moisture) - wet stacking
- Coking on cylinder's and exhaust due to incomplete fuel burn – cylinder glazing
- Oil contamination (fuel, acid)

Voltage and frequency control break down at very low loads

Modern Diesel Control

- Automatic engine startup and shutdown
- Automatic synchronization
- Automatic load (kW) sharing with other diesels
- Soft loading and unloading
- Automatic reactive power (VAR) sharing

“Waste” Heat

In rough numbers – of the heat content of the fuel, this is used to produce:

- 33 % - Electricity (up to ~45% maximum)
- 33 % - Heat out of the stack exhaust
- 33 % - Heat out of the water jacket
- You cant take all of the energy (primarily thermal) but up to ~85% total efficiency is possible…

In Alaska you can use the extra heat to heat buildings and water. But everybody should look at ways to use this energy.

- Water purification / desalination
- Ice Making
- Drying (Crops)

Modern Diesel Plants

Seeing much more on modular diesel plants

- Pre-engineered / fabricated containerized systems
- Integrated fuel storage and safety equipment
- High level of control and monitoring
- Easy diesel replacement
- Concern – May make them harder to retrofit in the field

Photo credit: Mia Devine

Photo credit: Mia Devine

Alaska Village Electric Cooperative modular diesel plants and fuel storage systems

Conclusions

- Diesel is a trusted generation technology that is here to stay
- However it is dependent on imported fuels
- Several other options – NG, Propane…
- Although it has been around for a while – technology is still improving through advanced control and new units should be considered as part of any analysis
- Advanced controls can greatly improve performance
- New integration approaches being worked on: The Alaska Energy Authority and Alaska Village Electric Cooperative are leading examples of modular diesel plant design