Hydro Québec
Institut de recherche

Natural Resources Canada / Ressources naturelles Canada — Canada

Hydro-Québec's 25 kV Test Line and Simulation Facilities at IREQ

Yves Brissette, Researcher IREQ
Chad Abbey, Researcher CANMET
Farid Katerei, Researcher CANMET
Richard Gagnon, Researcher IREQ
Gilles Ouellet and Michel Lessard, Technicians IREQ

Hydro Québec
Institut de recherche

Natural Resources Canada / Ressources naturelles Canada — Canada

- HQ test site consist of :
  - 2 feeders (common source)
  - Dedicated 47-MVA 25-kV transformer at the substation (no other loads)
  - Completely independent from the distribution network
  - 25 kV reclosers, breakers, automation equipment
  - Switchable capacitor banks
  - 2 x 3 167-kVA transformers 14,4 kV/347 V
  - 25 kV Voltage regulator
  - Internet and phone lines for every equipment
  - Auxiliary power 3 x 120 V

Hydro Québec
Institut de recherche

Natural Resources Canada / Ressources naturelles Canada — Canada

- *HQ test site also includes :*
  - *3-phase resistive/inductive (DELTA or/and STAR) loads (un - / balanced, distortion, PF adjustments) 400 kW*
  - *Induction motor with AC drive, variable load of 150 kW*
  - *Synchronous and asynchronous motors-generators with DC motor or AC drive induction motor for DG*
  - *Interconnection for Diesel generator*
  - *Protective relays*
  - *Fully variable DC sources for DC motor (field – armature)*
  - *16 channel acquisition system with Voltage, current, speed, signal sensors (600 V and 25 kV) (will be 32 channels 100 kHz)*

Hydro Québec
Institut de recherche

Natural Resources Canada / Ressources naturelles Canada — Canada

3 Small buildings : Load
Control and acquisition
Distributed generation

IREQ's test line

Hydro Québec
Institut de recherche

Natural Resources Canada / Ressources naturelles Canada — Canada

Voltage regulator – 3 phases

CL-6A regulator control

Cooper VWVE recloser

25 kV measuring station (voltage and current)

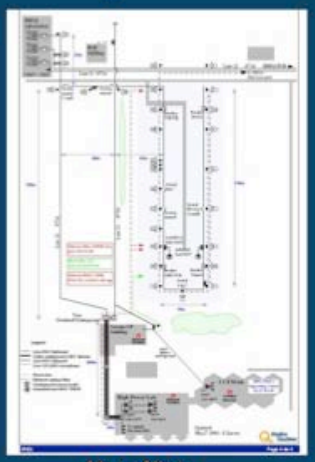

Map of line

Schweitzer SEL-351R for Recloser

Hydro Québec
Institut de recherche

Natural Resources Canada / Ressources naturelles Canada — Canada

Load for motor

Resistive and inductive loads

AC Induction motor and DC generator

AC Drive for induction motor

Load and acquisition control room

Hydro Québec

Natural Resources Canada / Ressources naturelles Canada — Canada

Contactors and breakers

Speed relay

DC power supplies

Soft Start for induction generator and Beckwith relay

Other protection relays under tests

measurements and aux. power

Induction generator

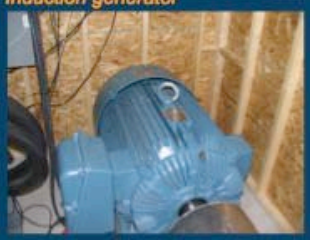

Coupling of machines

DC motor

Hydro Québec
Institut de recherche

Natural Resources Canada / Ressources naturelles Canada — Canada

500-KW Cummins DIESEL Synchronous generator with synchronizing control (Power Rent - Onan)

Diesel-generator controler

Remote control

Breaker and contactor for diesel interconnection

Hydro Québec
Institut de recherche

Natural Resources Canada / Ressources naturelles Canada — Canada

Acquisition computer

DC measurements
Voltage and current

25-kV voltage and current transformers

Acquisition and storage unit

600-V current measurements

Hydro Québec
Institut de recherche

Natural Resources Canada / Ressources naturelles Canada — Canada

It also needs qualified personnel !!!

Hydro Québec
Institut de recherche

Natural Resources Canada / Ressources naturelles Canada — Canada

- *Recent DG tests on the line*
  - *Tests using Diesel synchronous generator*
    - *Evaluation of protective devices*
    - *Network response and machine behaviour*
  - *Tests using asynchronous motor as a Wind generator*
    - *Evaluation of protective devices*
    - *Network response and machine behaviour*
    - *Using the machine as stand alone with capacitors*
  - *All tests performed under various load conditions*
  - *Tests includes all systems together and islanding*

Hydro Québec
Institut de recherche

Natural Resources Canada / Ressources naturelles Canada — Canada

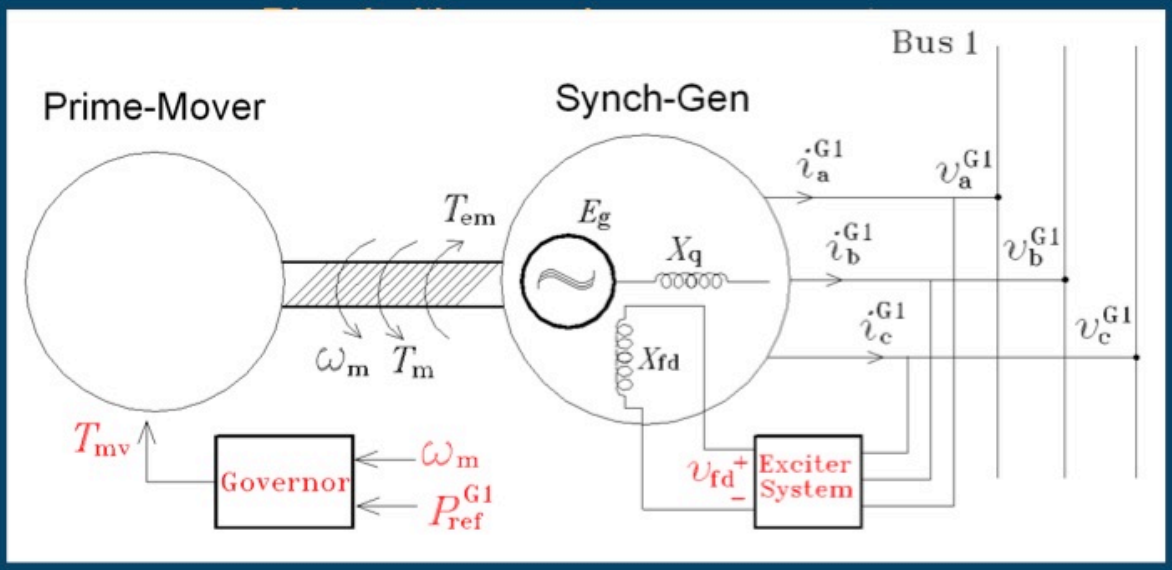

Hydro Québec
Institut de recherche

Natural Resources Canada / Ressources naturelles Canada — Canada

Induction motor working as a generator

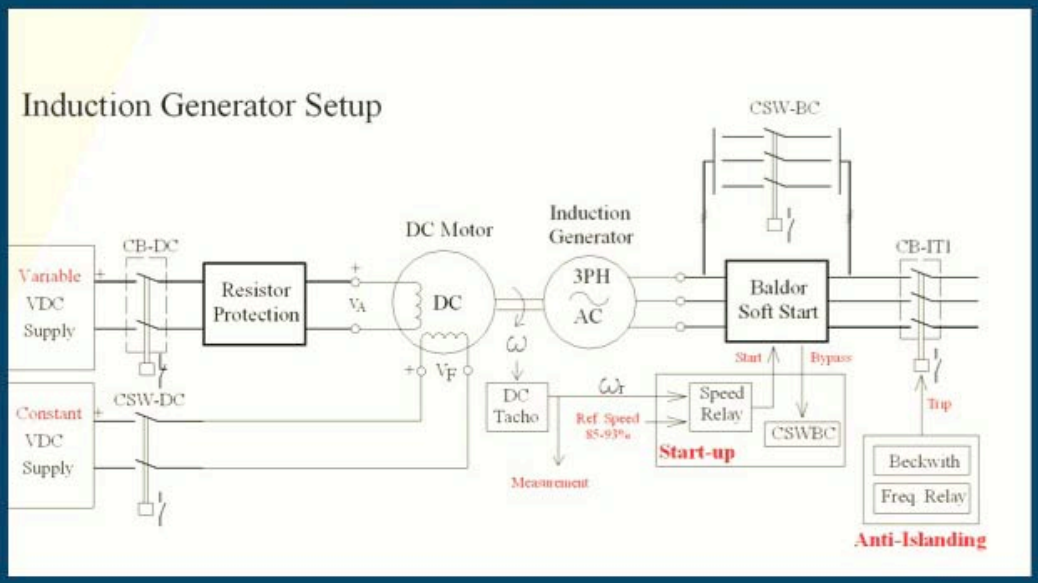

Hydro Québec
Institut de recherche

Natural Resources Canada / Ressources naturelles Canada — Canada

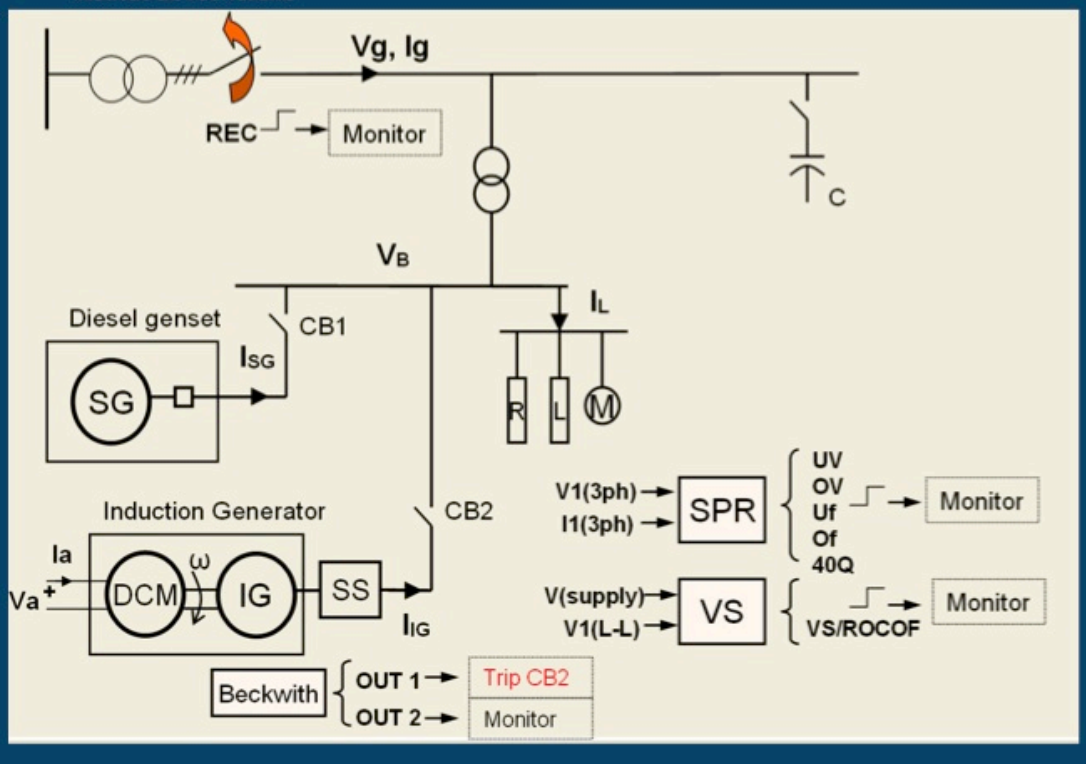

Hydro Québec
Institut de recherche

Natural Resources Canada / Ressources naturelles Canada — Canada

Relay Manufacturer	Relay Name	Anti-islanding Approach
Beckwith	Intertie/generator relay M-3410A	Voltage and frequency limits
Crompton	Vector shift and ROCOF	Vector shift ROCOF
Crompton	System Protection Relay (SPR)	UV/OV, UF/OV Reverse reactive power

Hydro Québec
Institut de recherche

Natural Resources Canada / Ressources naturelles Canada — Canada

Induction motor driven by DC motor connected to main network

25 kW imposed power - Start up results

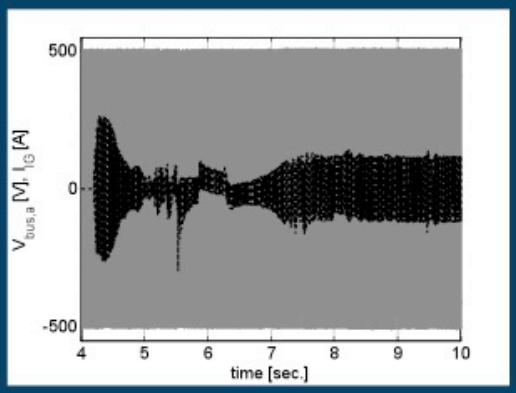

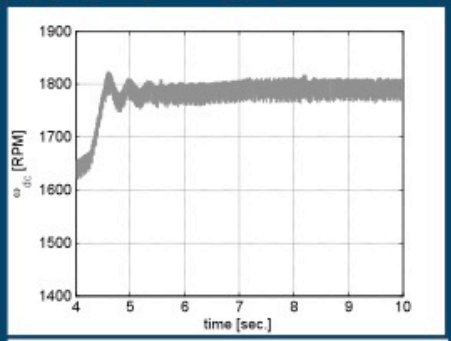

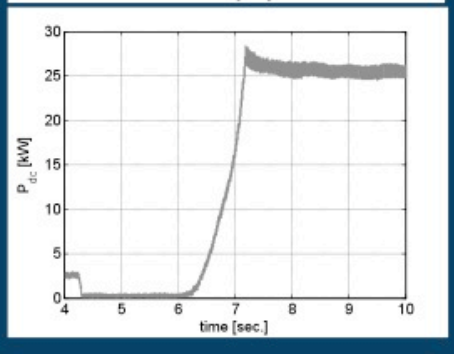

Hydro Québec
Institut de recherche

Natural Resources Canada / Ressources naturelles Canada — Canada

Induction motor driven by 25-kW DC motor connected to main network

Start up results : Soft Start perfomance (1600 rpm then 1807 rpm)

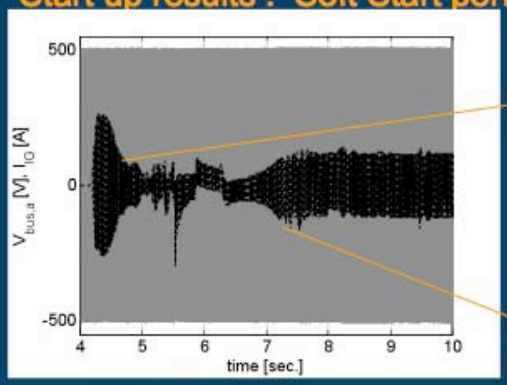

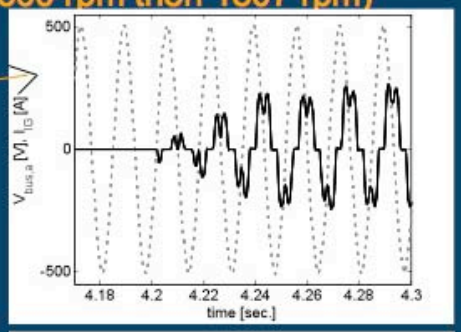

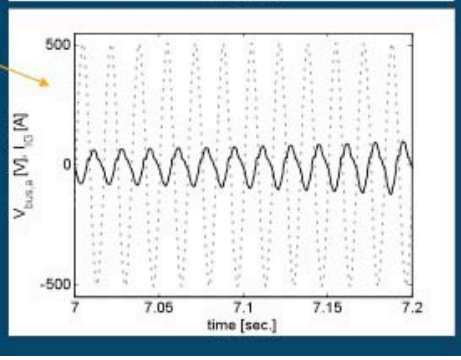

Hydro Québec
Institut de recherche

Natural Resources Canada / Ressources naturelles Canada — Canada

Induction generator Islanding and relay performance

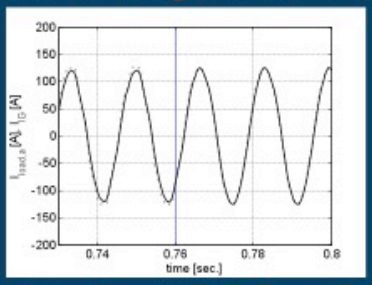

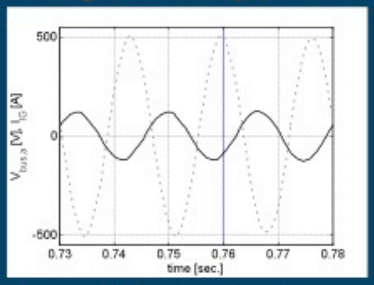

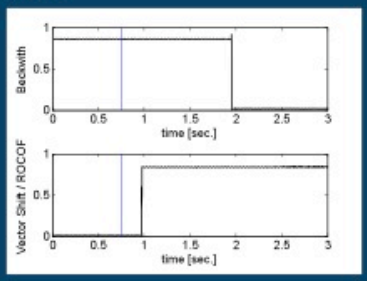

Synchronous Generator Islanding and relay performance

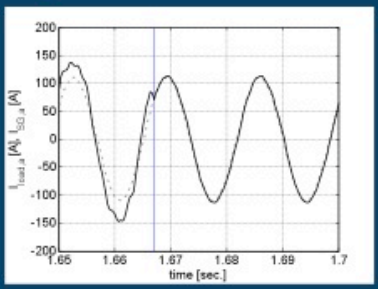

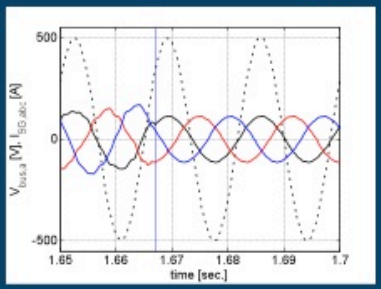

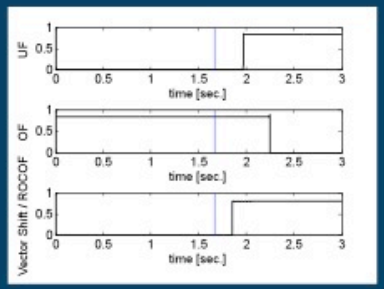

Hydro Québec
Institut de recherche

Natural Resources Canada | Ressources naturelles Canada | Canada

System Power Simulation Laboratory

Hydro Québec

Natural Resources Canada | Ressources naturelles Canada | Canada

HYPERSIM computer with interface and device under test

Hypersim computer

Equipment under test (ABB controler)

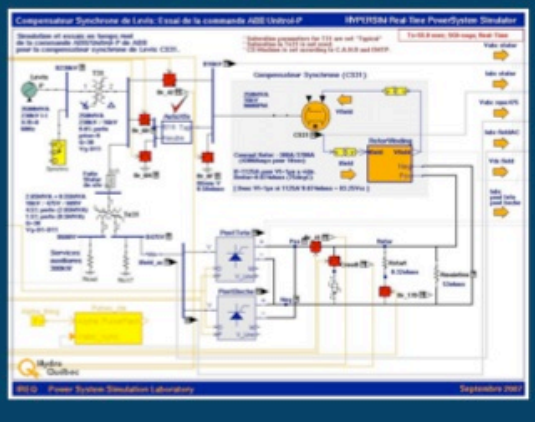

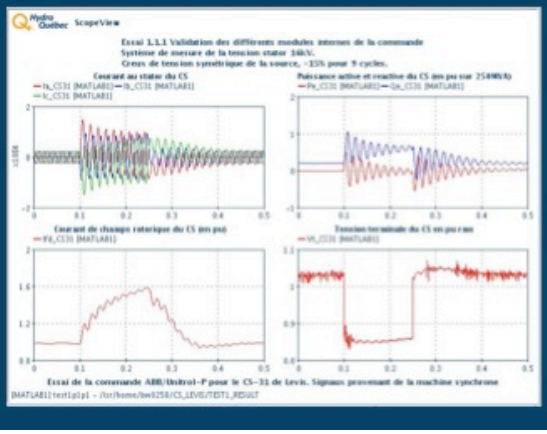

Hydro Québec

Natural Resources Canada / Ressources naturelles Canada — Canada

Integration of 3 Wind farms on a Series-Compensated Power System

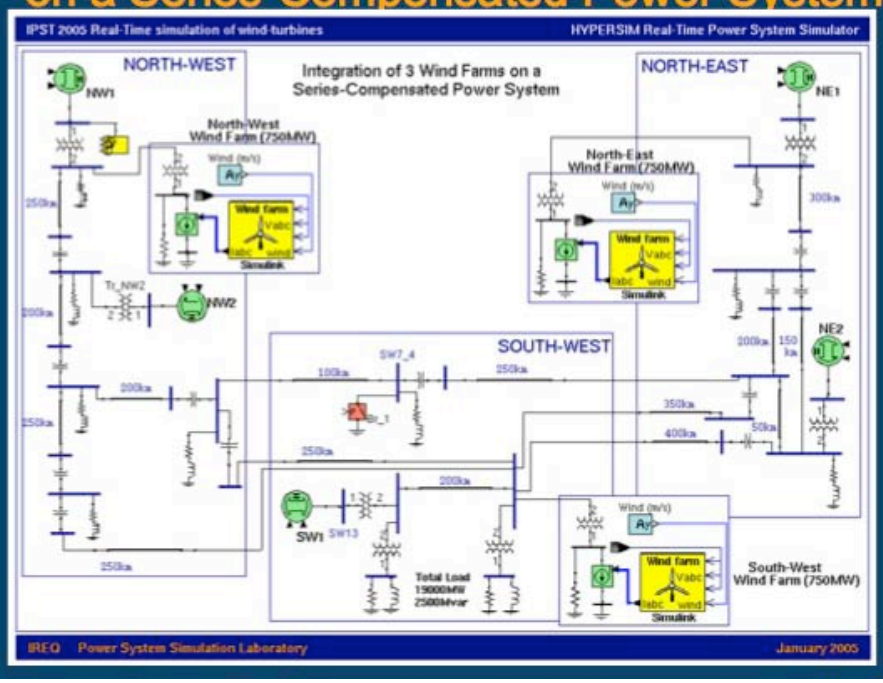

Hydro Québec

Institut de recherche

Natural Resources Canada / Ressources naturelles Canada — Canada

Distribution Network with Wind turbines 7 MW

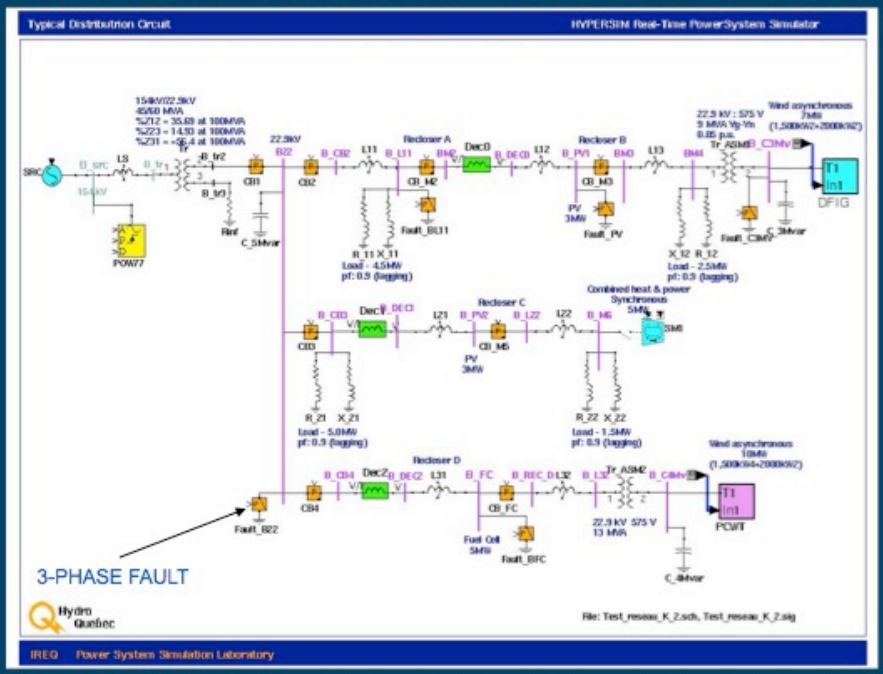

Hydro Québec
Institut de recherche

Natural Resources Canada / Ressources naturelles Canada — Canada

Distribution network with Wind turbines 7 MW : 3-Phase fault at 22,9 kV Bus

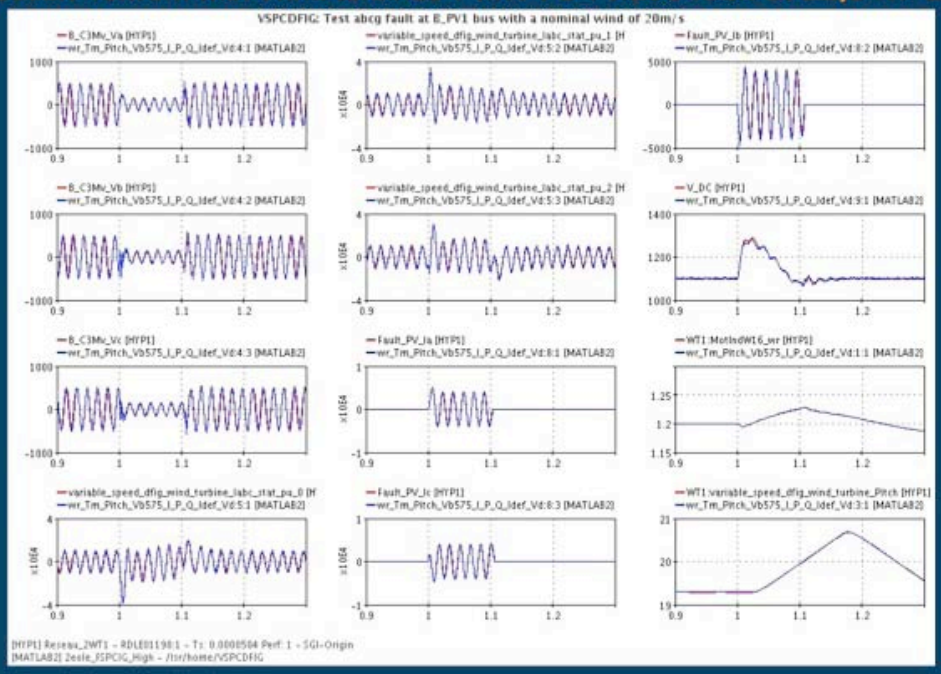

Hydro Québec
Institut de recherche

Natural Resources Canada / Ressources naturelles Canada — Canada

- *Future projects with partnerships*
  - *Testing reverse flow on transformers with reactive power, harmonics and higher voltage. (Hydro One contract)*
  - *Testing other protective devices for DG (CANMET)*
    - *Testing relays with vector shift (most efficient)*
  - *Validate simulation models of wind turbine (IREQ-CANMET)*
  - *Additional tests for validation of equipment for DG and Wind-Diesel systems*

Québec
Institut de recherche

Natural Resources Canada / Ressources naturelles Canada

Canada

- *Any questions ?*

Yves Brissette
IREQ, 450-652-8467
Brissette.yves@ireq.ca