DTU

RISØ

SYSLAB

A platform for research and testing of decentralised energy resource based power systems

Henrik Bindner
Wind Energy Systems
Wind Energy Department
Risø DTU

1 November 2007

Acknowledgement:
The parts of the work presented is supported by Energinet.dk through the PSO-project "karakterisering af vanadium batteri" and EnMi-project " Self-organising distributed control of a distributed energy system with a high penetration of renewable energy"

DTU

RISØ

Presentation outline

- Background
- Purpose of SYSLAB
- SYSLAB today
- Activities using SYSLAB
- Perspectives

DTU

RISØ

Energy System Integration

- Various parts of the energy system will be integrated to increase overall efficiency and sustainability
- Security of supply has to be ensured even with the changes in production and consumption technologies

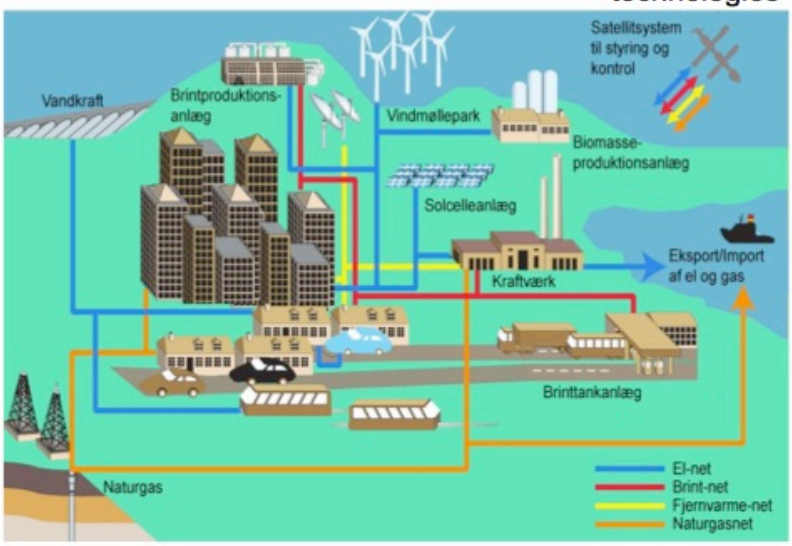

- New control structures
  - Smartgrids
  - Microgrids
  - Cells concept
  - Virtual Power Plants

DTU

RISØ

Background for SYSLAB

- Many years of work in the field of autonomous wind-diesel systems
  - System facility for testing, performning experiments etc.
  - Model development
  - Control concepts
- Distributed Generation is becoming more important/significant for the operation of the system
- Decentralised control of power systems is becoming more realistic as more and more computer power is being embedded
- Demand side management has a large potential
- Communication between units is becoming possible
- The level of Renewable Energy in the power system is increasing
- The operation of the power system is becoming increasinlgy market based

DTU

RISØ

Power Systems with high penetration of wind

- Production and consumption has to match at any instant
- Issues with wind
  - Fluctuations
  - Variations
  - Predictability
- The rest of the system has to compensate for the fluctuations on the short time scale (sec-min) and variations and prediction errors on a longer time scale (hours-days)
- Flexibility of the rest of the system is crucial for achieving high penetration

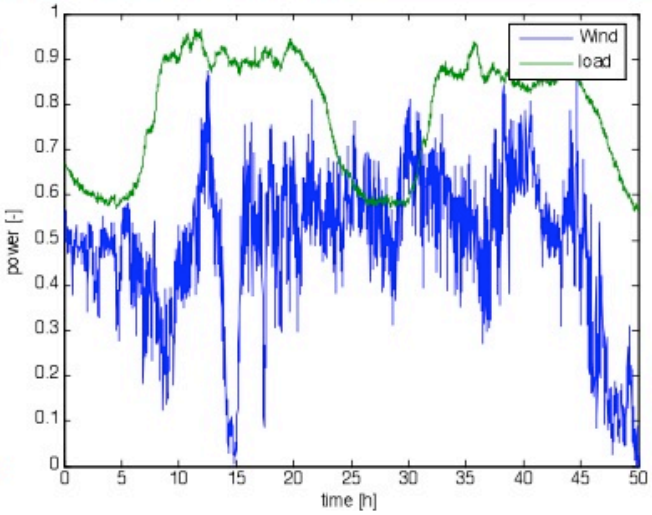

- Flexibility can be provided by several means
  - Production
  - Flexible/intelligent consumption
  - Energy storage

DTU

RISØ

SYSLAB – Distributed Energy System Laboratory

- SYSLAB is a **platform** for Decentralised Energy Resources research and testing
- It is a flexible experimental setup up
- It includes several production and consumption units
- It has embedded computing power and flexible communication
- It has very flexible control possibilities
- It can be extended

DTU

RISØ

Main parts of SYSLAB

- Production and consumption equipment
- Measurement system
- Computer network
- Node-computers with linux
- Software: agent platform, measurement database

DTU

RISØ

Electrical layout of SYSLAB

- Flexible grid configuration
- Autonomous grid
- Units can be tested in under various grid conditions
- Suitable for component as well as system tests
- Very flexible control
- Control computer at each component
- Communication network
- Agent-based software infrastructure

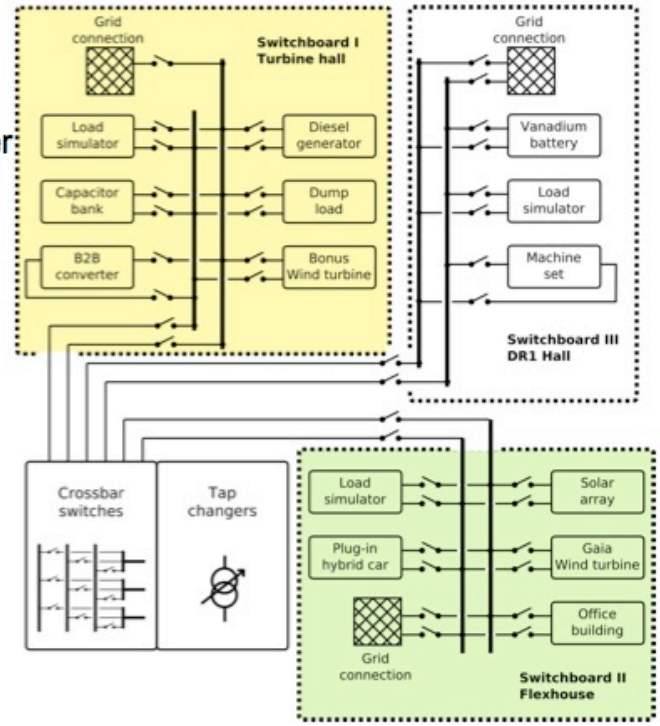

DTU

RISØ

What can SYSLAB be used for

- System control concepts
  - Distributed and decentralised control
  - Exploitation of demand response/demand side management
  - Communication – what has to be communicated, what happens when the communication is interrupted
- Interaction between components in a heterogenoues system
  - Wind, Solar, Electrochemical Storage, Hydrogen system, Conventional production, Loads etc.
- Testing of components
  - Characterisation
  - System properties

DTU

RISØ

Examples on activities in SYSLAB

- System Control:
  - Self-organising distributed control of a distributed energy system with a high penetration of renewable energy (EnMi)
- Energy Storage:
  - Characterisation of Vanadium redox-flow batteries (PSO)
- Flexible Consumption:
  - FlexHouse

DTU

RISØ

Self-organised distributed control of a distributed energy system with a high penetration of renewable energy Project description (objectives)

- The objective of the project is to develop a proof-of-concept model for a decentralised, distributed and modular control system to improve stability, availability, robustness and flexibility of an energy system in the presence of intermittent renewable energy sources such as wind and solar.
- This goal is to be achieved through:
  - Enabling direct communication between units in the system. Each unit makes itself known to the system and can be queried for its properties, capabilities and status.
  - Making each unit "location-aware"in terms of system topology, and providing a strategy for self-organisation of units in functional and logical groups.
  - Investigating techniques to estimate the present and forecast the future state of the units, such as renewable energy production, loads, production constraints and buffer capacities.
  - Finding ways in which functional groups of units can negotiate - either autonomously or in accordance with neighbouring groups - an operational, economical solution that matches the energy production to the consumption.

DTU

RISØ

Vision

- Exploiting the distributed generation and embedded intelligence to create a more robust and economic power system
- Plug & Play power components offering services to the system
- Mechanisms to discover and organise services such as frequency and voltage control
- Grid is self aware
  - topology
  - available units and services
  - available data

DTU

RISØ

Issues for a Self-organising Power System

- Communication
  - bandwidth requirements
  - protocols – scada or high level
- Scalability
  - number of components will be high
  - many types of components will be present
- Information integrity/consistency
  - Propagation of new information

- Control, stability ...

- Safety
- Security of supply

DTU

RISØ

Self-organised distributed control of a distributed energy system with a high penetration of renewable energy

- Agent-based control of power system
- Agents are
  - Software objects
  - Connected to the real world
  - Pursuing a goal
  - Interacting with othe agents

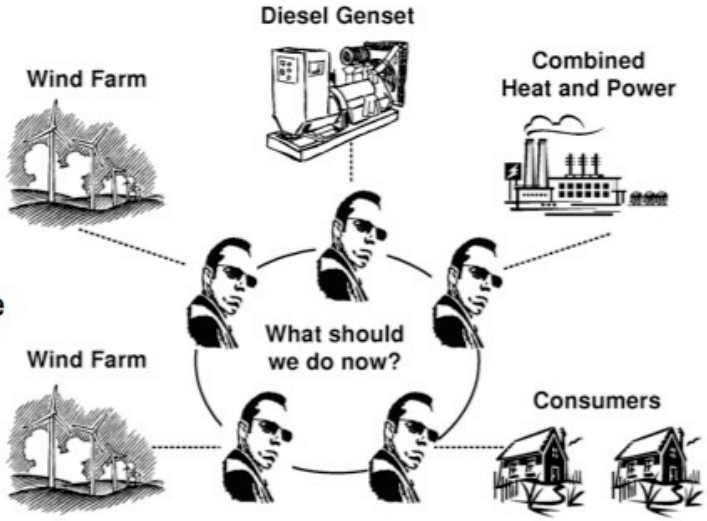

DTU

RISØ

Power FlexHouse

- Provide a software and hardware platform for implementation of controllers for flexible consumption
- Study control strategies for flexible loads, sensor requirements, modelling
- Investigate how users can interact with system
- Enable investigation of the interaction between control capabilities of a consumer load and the requirements of the rest of the system

- Communication interface between load and system:
  - Which information to exchange,
  - How to communicate strategies,
  - Links to existing communication protocols

DTU

RISØ

PowerFlexhouse

- Intelligent control
- Demand response
- Many individually controllable loads
  - Heater
  - Airconditioners
  - Water heater, coffee machine
- Many sensors
  - Motion
  - Temperature
  - Door/Window
  - Solar irradiation
  - Wind speed
  - ...

- Plug-in/vehicle2grid hybrid car: Toyota Prius with extended battery and bi-directional converter

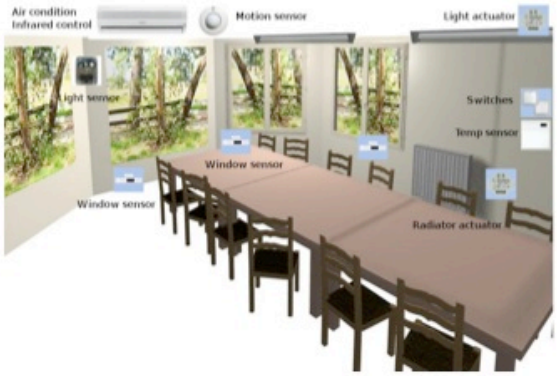

DTU

RISØ

VRB Flow Battery Technology

A liquid electrolyte that is separate from the electrode.

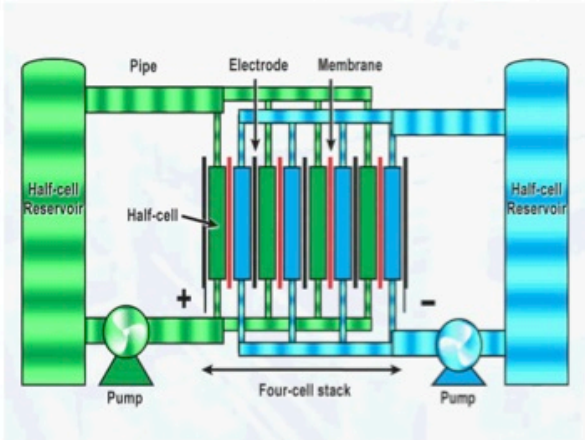

Oxidation process		Reduction process
$V^{4+} \Rightarrow V^{5+} + e^-$	Charge ←	$V^{3+} + e^- \Rightarrow V^{2+}$
$V^{5+} + e^- \Rightarrow V^{4+}$	Discharge →	$V^{2+} \Rightarrow V^{3+} + e^-$

- An electrochemical energy storage system operating at ambient temperatures
- Reversible fuel cell – reduction and oxidation of single unique element: Vanadium
- No cross contamination as with other storage systems. Electrolyte never wears out – high residual value
- Very low maintenance
- Deep cycles (20 to 80%) >10,000
- Low self discharge – indefinite energy storage
- Energy can be recovered instantaneously
- Battery can recharge as fast as it discharges (1:1)
- Power and Energy separately scaleable

DTU

RISØ

Vanadium flow battery

- Current costs:
  - 250kW/2MWh:$1.000.000
- Potential for lower cost if mass-produced

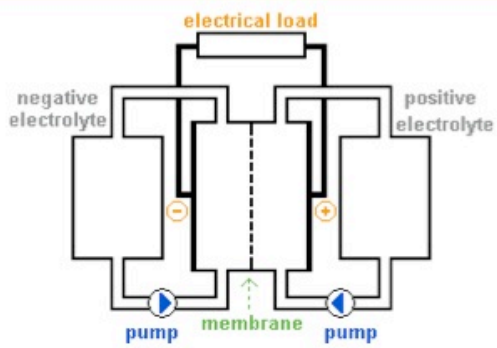

- Energy density: ~25Wh/kg
- Risø unit:
  - 15kW/120kWh
  - 4 quadrant power electronics
  - Island and grid connected mode of operation

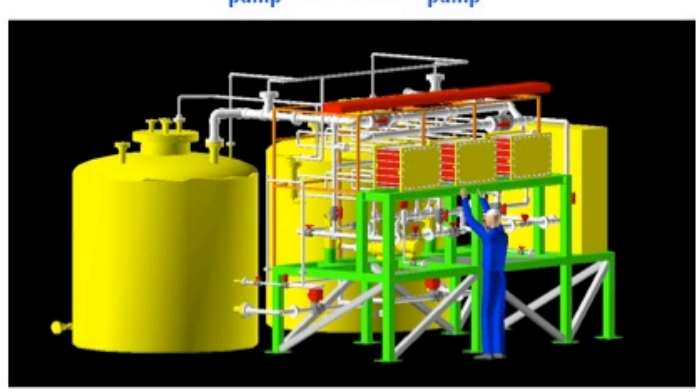

DTU

RISØ

Component testing – Characterisation of vanadium batteries

- PSO-project – supported by Energinet.dk
- Hands-on experience
- Efficiency @ different operating conditions
- Response time etc.
- Limits for operating range
- Cycling ability
- Grid interface

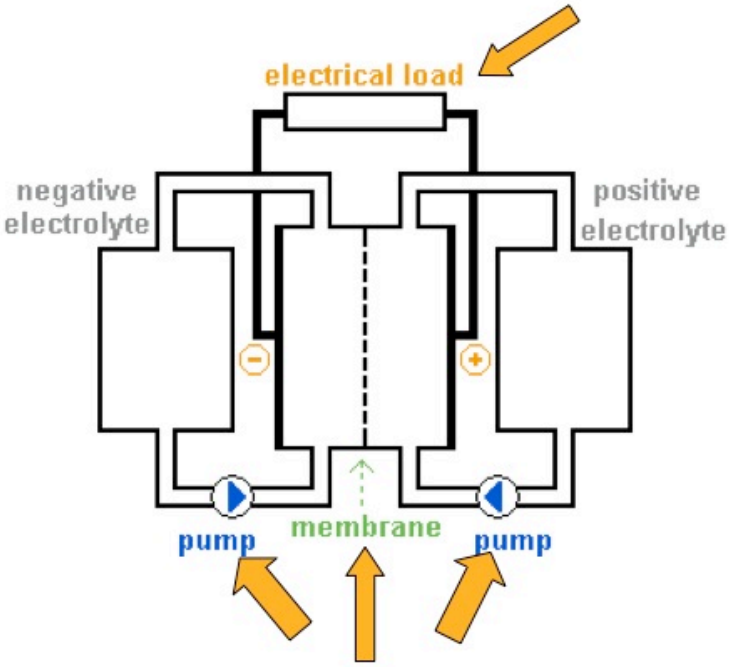

DTU

RISØ

Vanadium redox-flow batteries – initial results

- Unit was installed in August 2007
- It is still in the pre-test phase
- Unit has been being factory testet

- Foot-print is 7mx7m
- Tanks are 8m^3 each

DTU

RISØ

Factory test of system

- 3*5kW cells stacks
- 15kW/20kVA power electronics

DTU

RISØ

Factory tests II

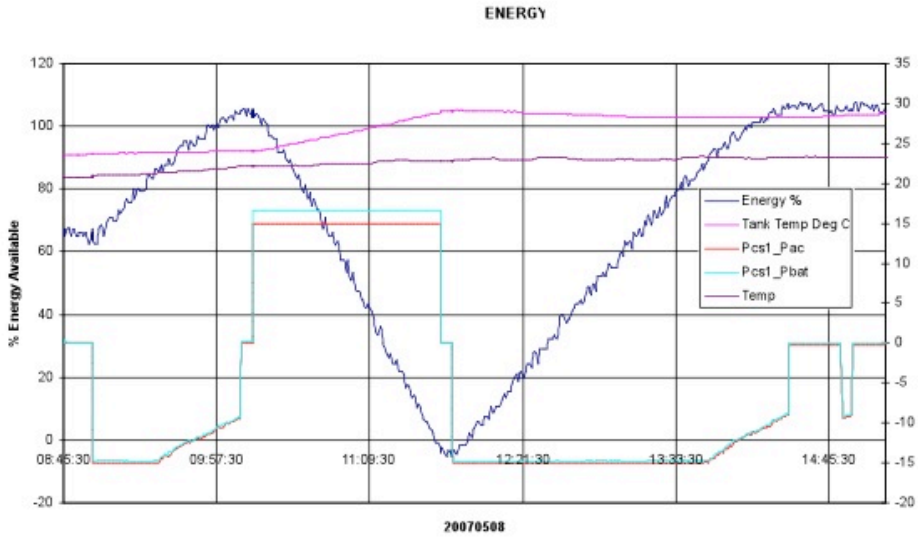

DTU

RISØ

Factory test III

- Cycling test

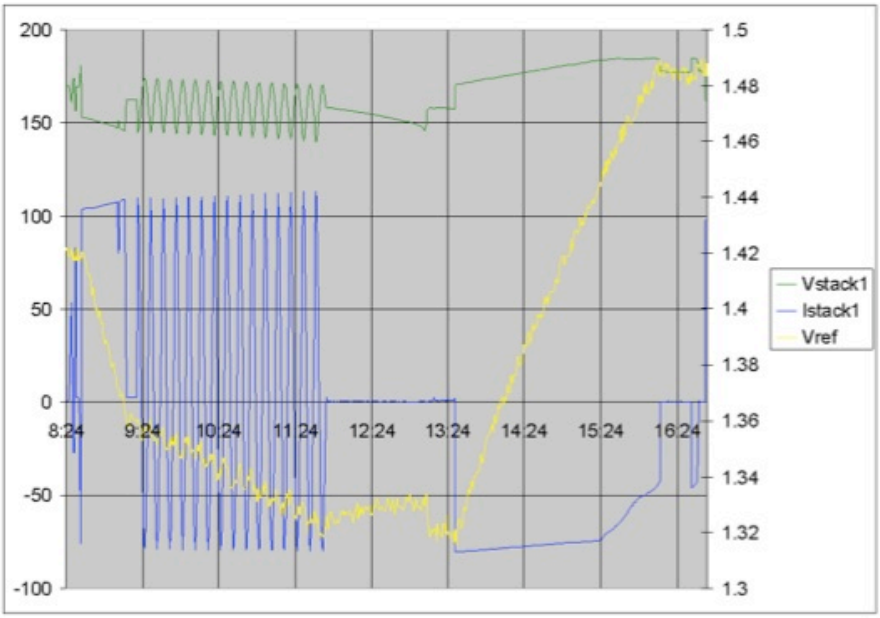

DTU

RISØ

SYSLAB – Development perspectives

- Investigate technical possibilities
  - Embedded intelligence
  - Distributed control
  - Integration of energy carriers
  - Multiple RE sources
- Possible extensions
  - Hydrogen/Fuel cells
  - Biomass
  - Risø district heating/ houses

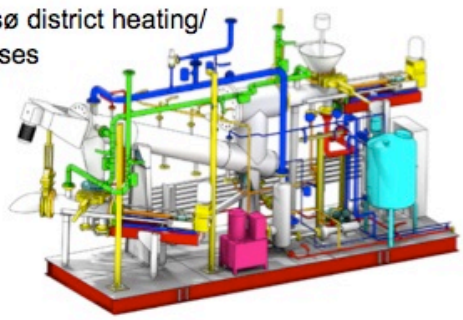

- Integrates several areas of research
- Upscaling to nationwide system
  - Simulations (IPSYS)
- Facility used in PhD and MSc projects