Spirae The Power Behind Renewable and Distrubuted Energy

Developing And Demonstrating An Advanced Cell Architecture For Managing Electric Power Systems With High Penetration of Distributed Energy Resources

Larry L. Adams
Spirae, Inc.

2008 Wind-Diesel Workshop
Girdwood, Alaska
April 23-25, 2008

Danish Power System Evolution

1980's Primary Gen

2000's Distributed Gen

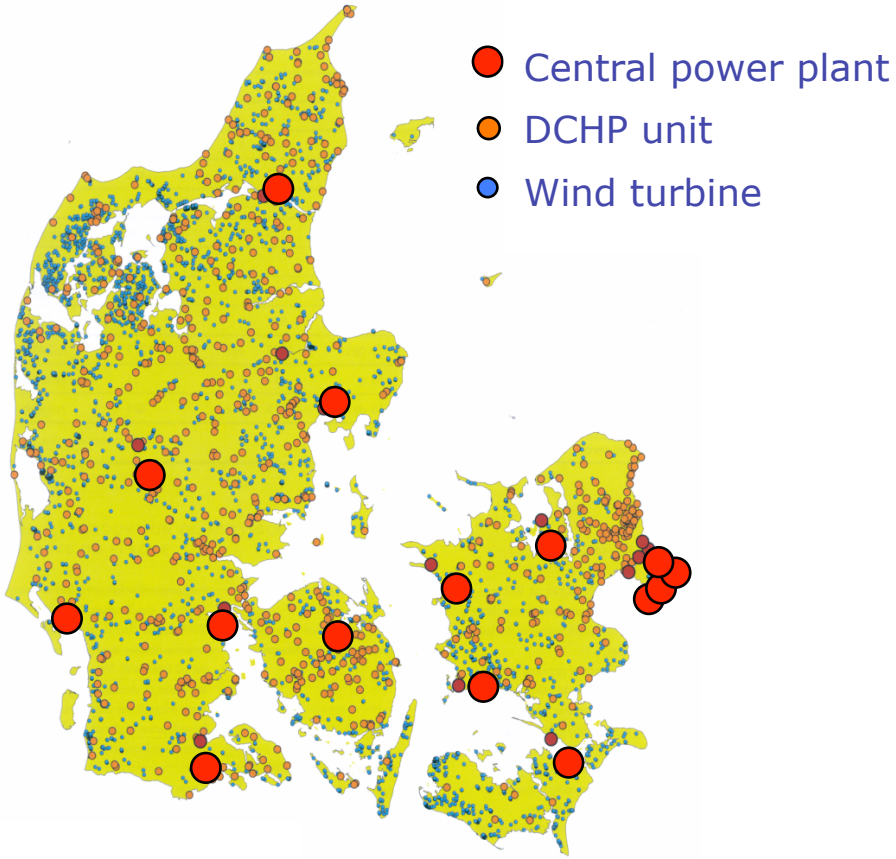

Generation Mix

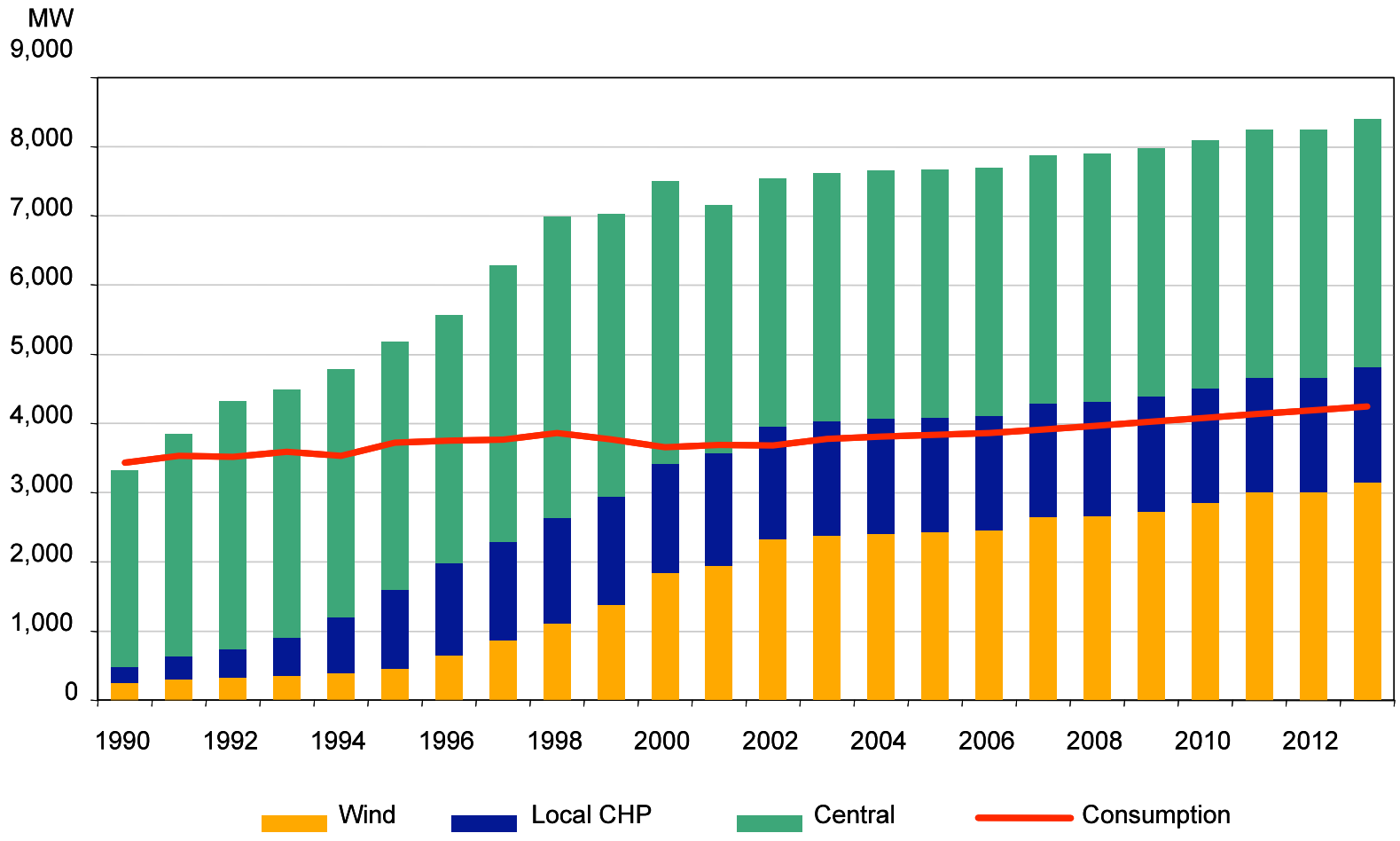

(Western Denmark)

DG Penetration in Denmark

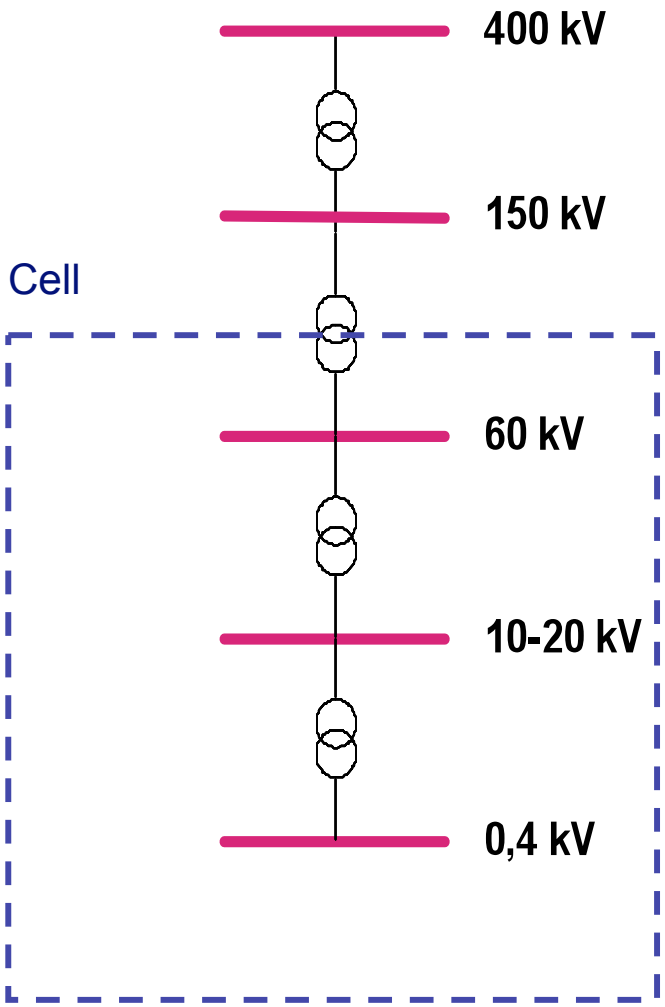

4 central CHP units (1488 MW)

6 central CHP units (2014 MW)
Horns Rev offshore wind farm (160 MW)

17 dispersed CHP units (569 MW)
34 wind turbines (41 MW)

475 dispersed CHP units (991 MW)
2180 wind turbines (1597 MW)

260 dispersed CHP units (83 MW)
1860 wind turbines (576 MW)

Pilot Project in Denmark

Cell Assets and Real-Time Monitoring

Substation

CHP

Wind Turbines

Monitoring System

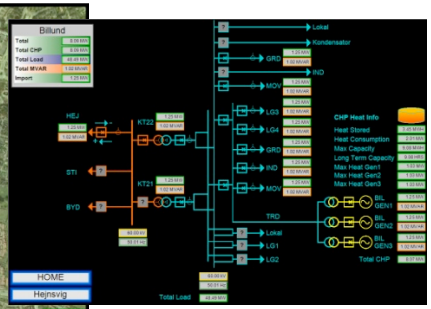

Variability: Active and Reactive power flows

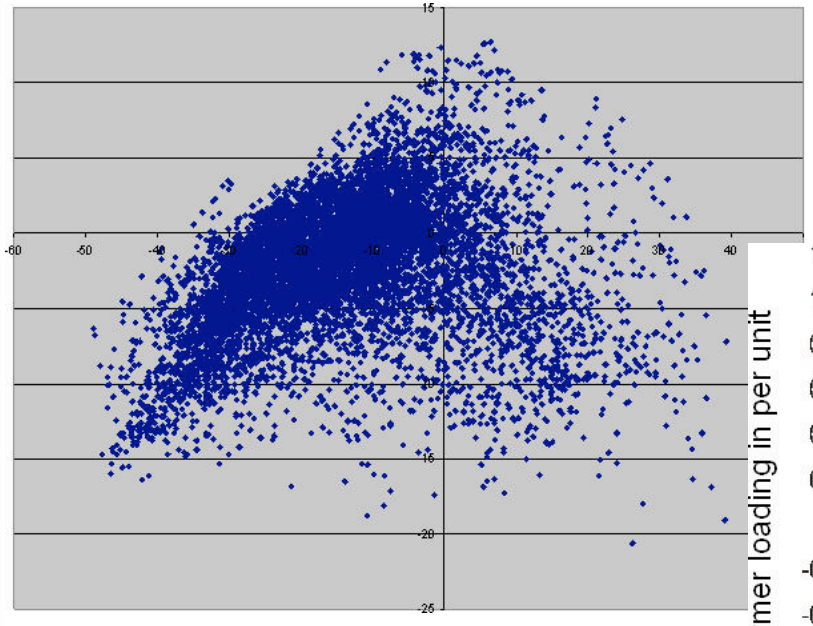

Active vs. Reactive flows across Cell boundaries

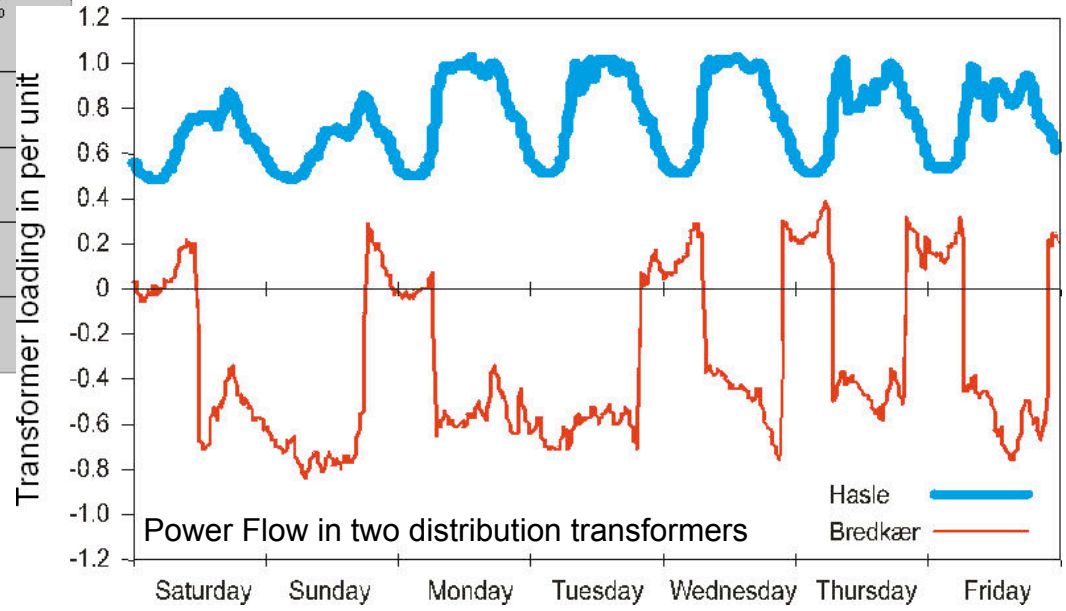

Power Flow in two distribution transformers

Data from Denmark

Source: Energynet.dk

Wind Production Curve

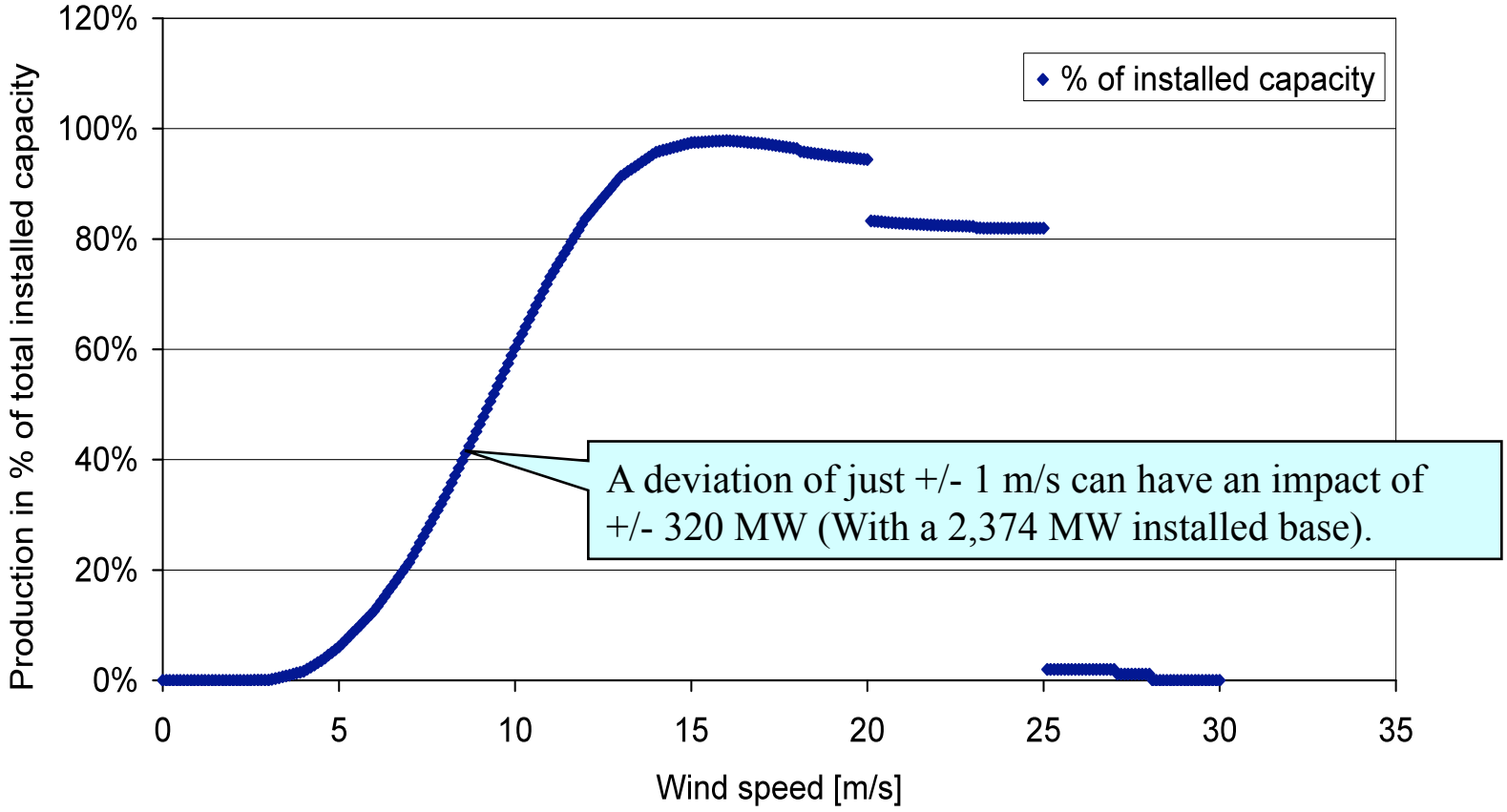

Data from Denmark

Source: Energynet.dk

High Speed WT Data

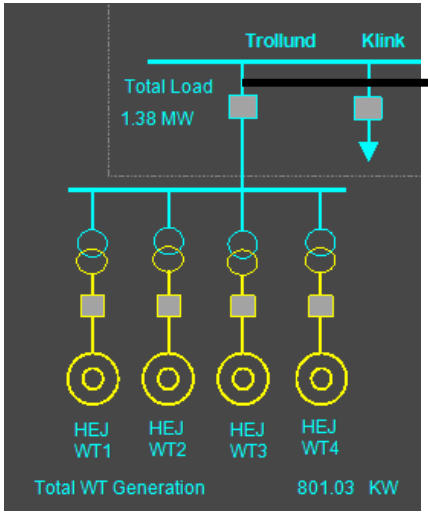

"Pole" switching events

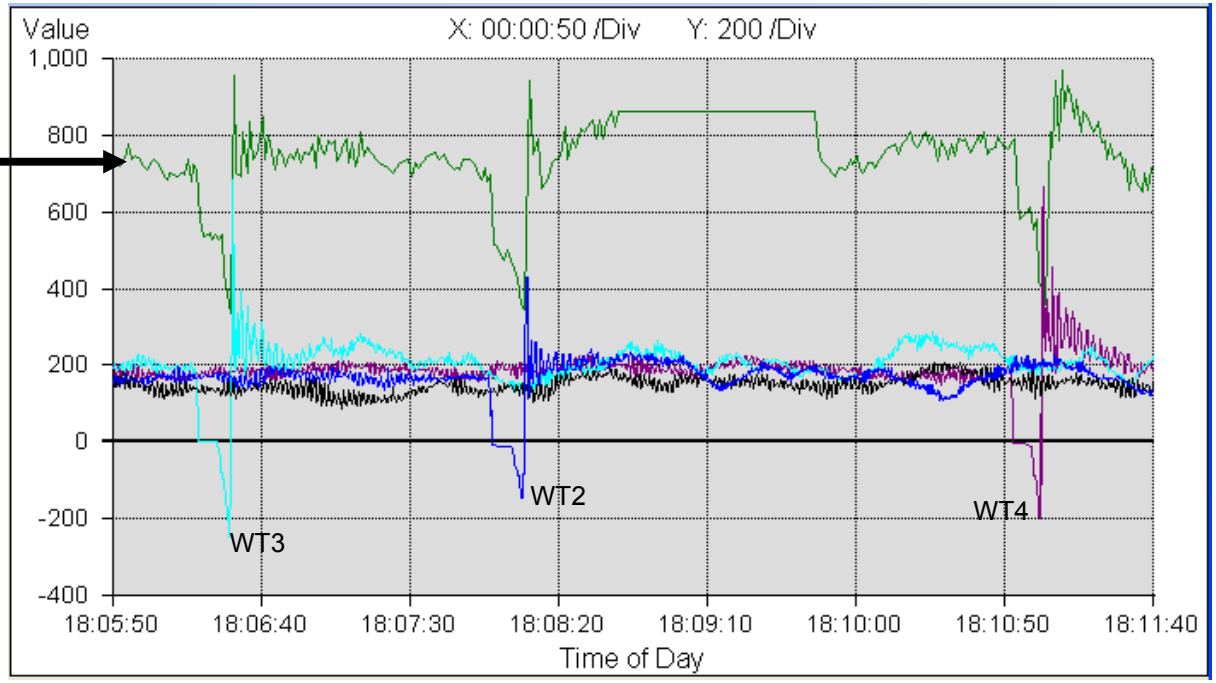

Data From Denmark, November 10, 2006

Smart Grid: Cell Monitoring and Control

- Normal Ops
- Ridethrough
- Island
- KW/Kvar Imp/ Export

Control Center

Cell Controller(s)

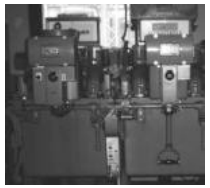

Substation Controllers

Asset Controllers

Cell Controller Architecture—Overview

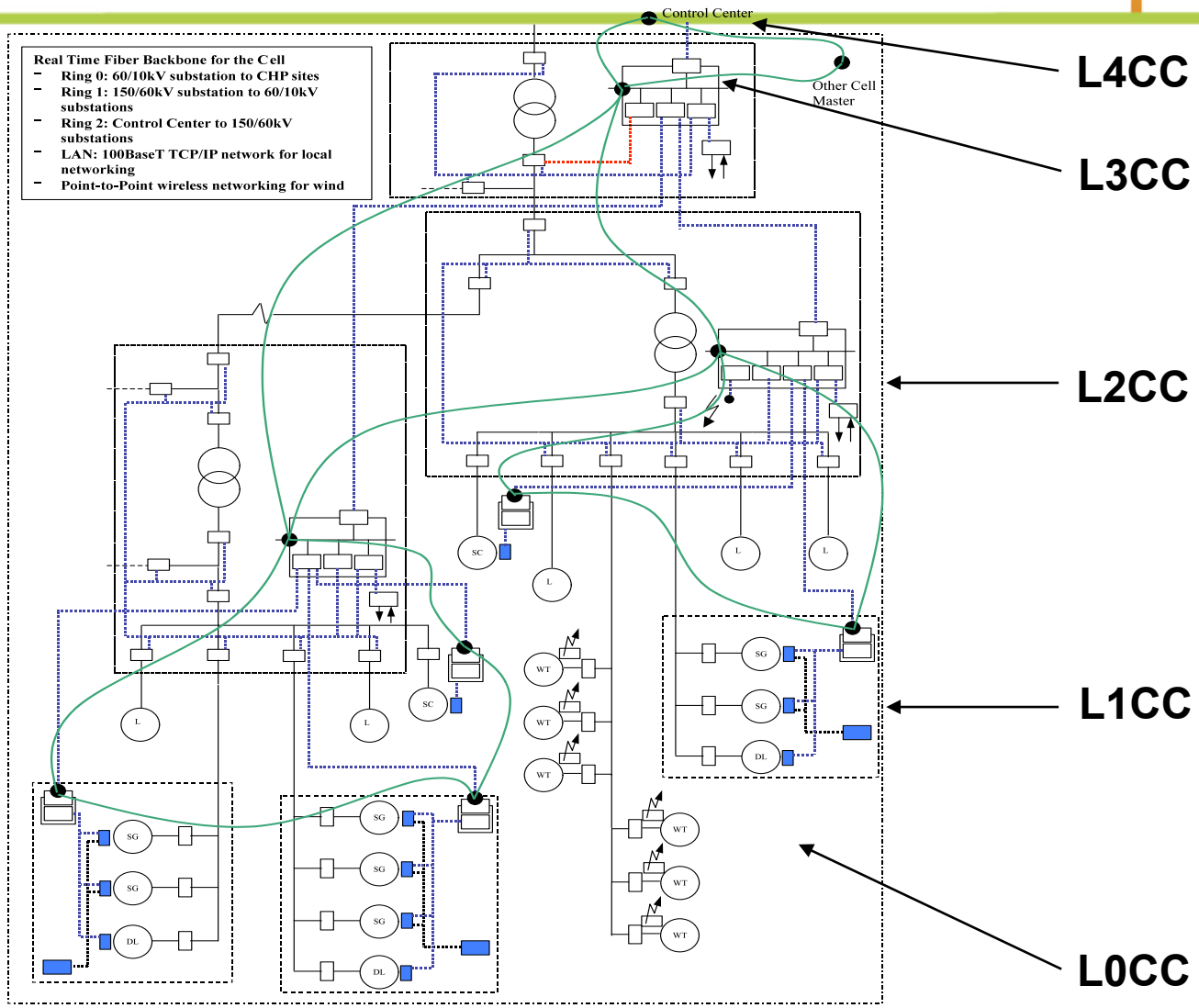

Level-2 Control Operates a Sub-Cell

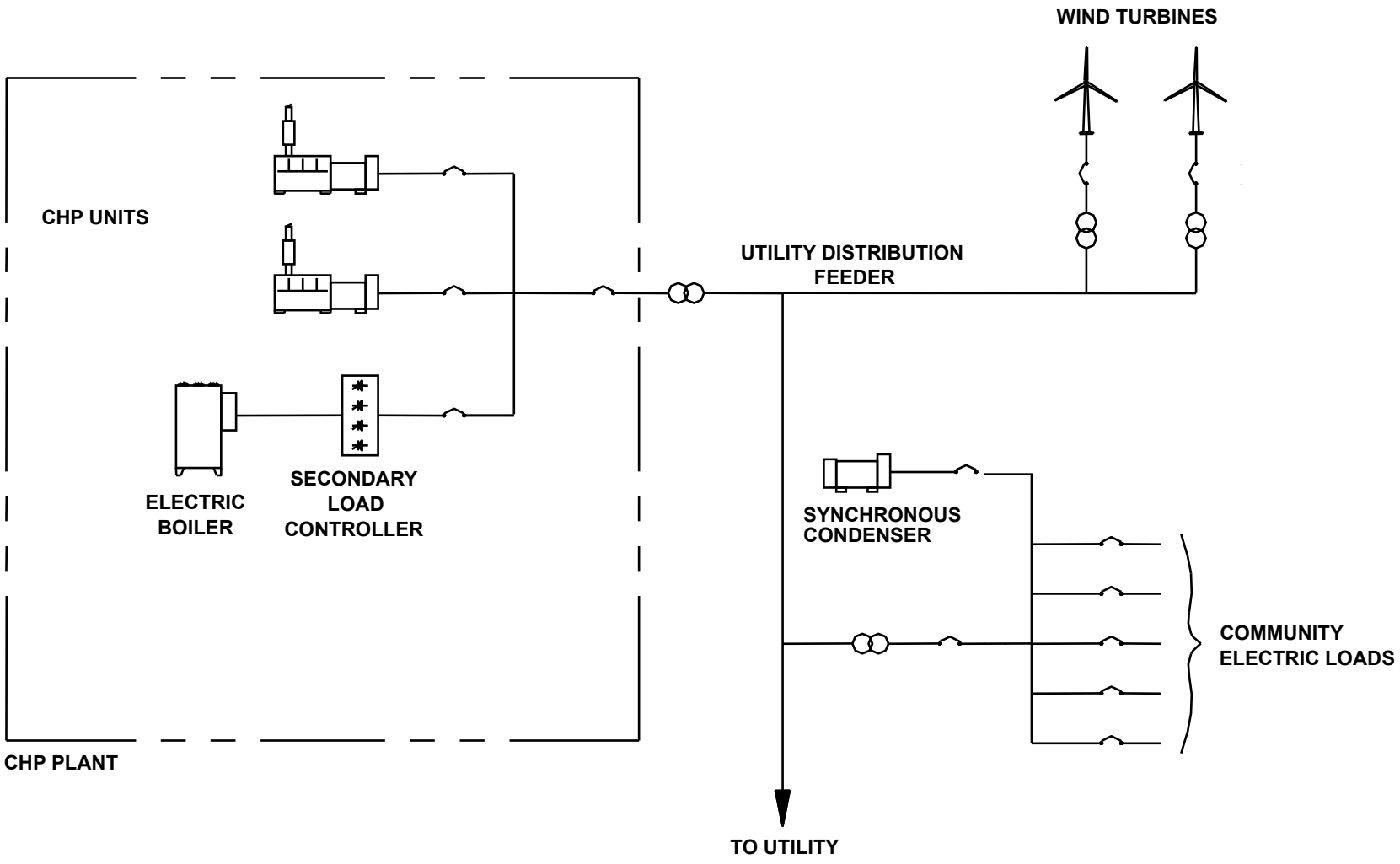

Wind-only Isochronous Secondary Load Controller

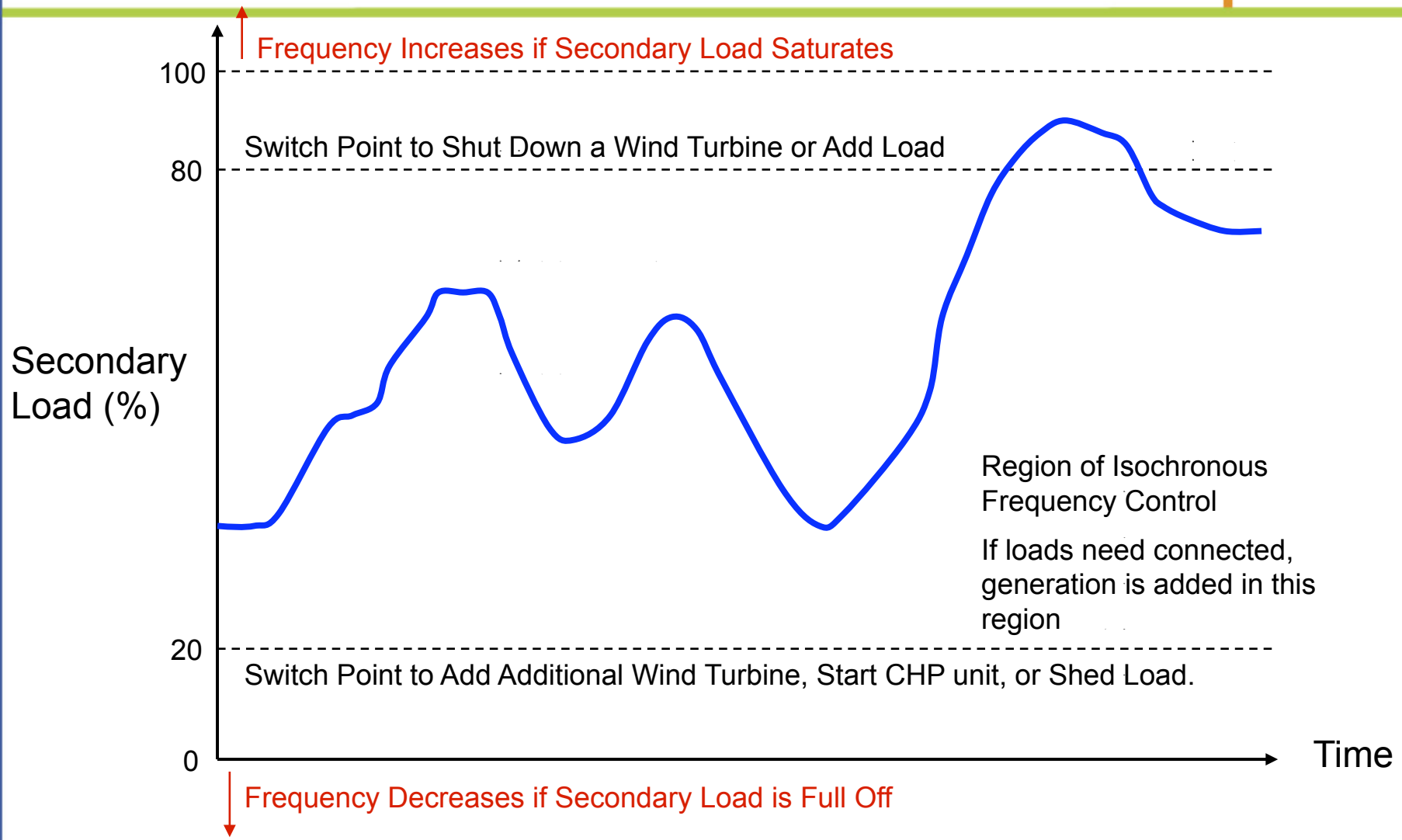

CHP Isochronous Load Sharing

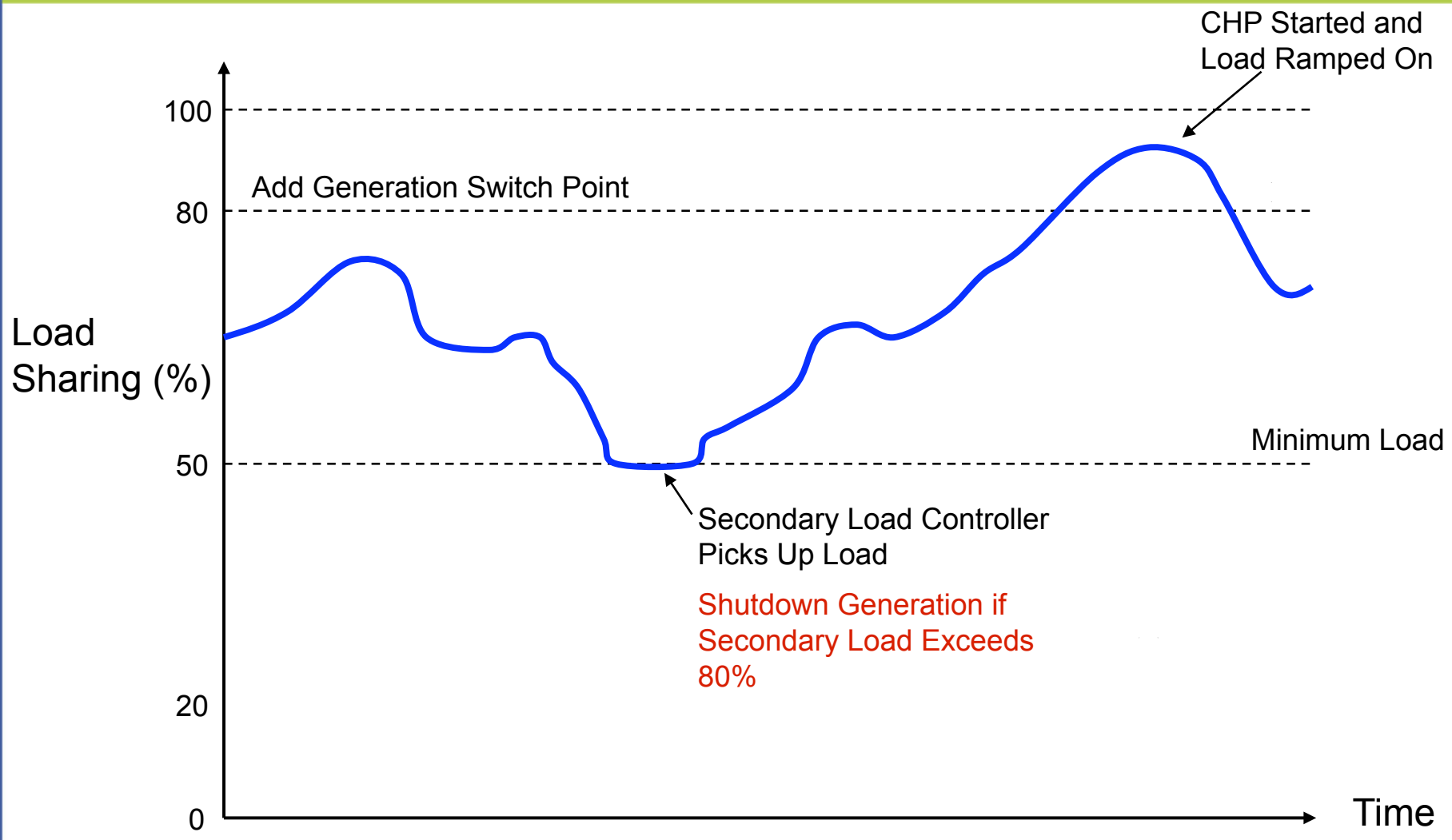

Import/Export with Secondary Load Controller

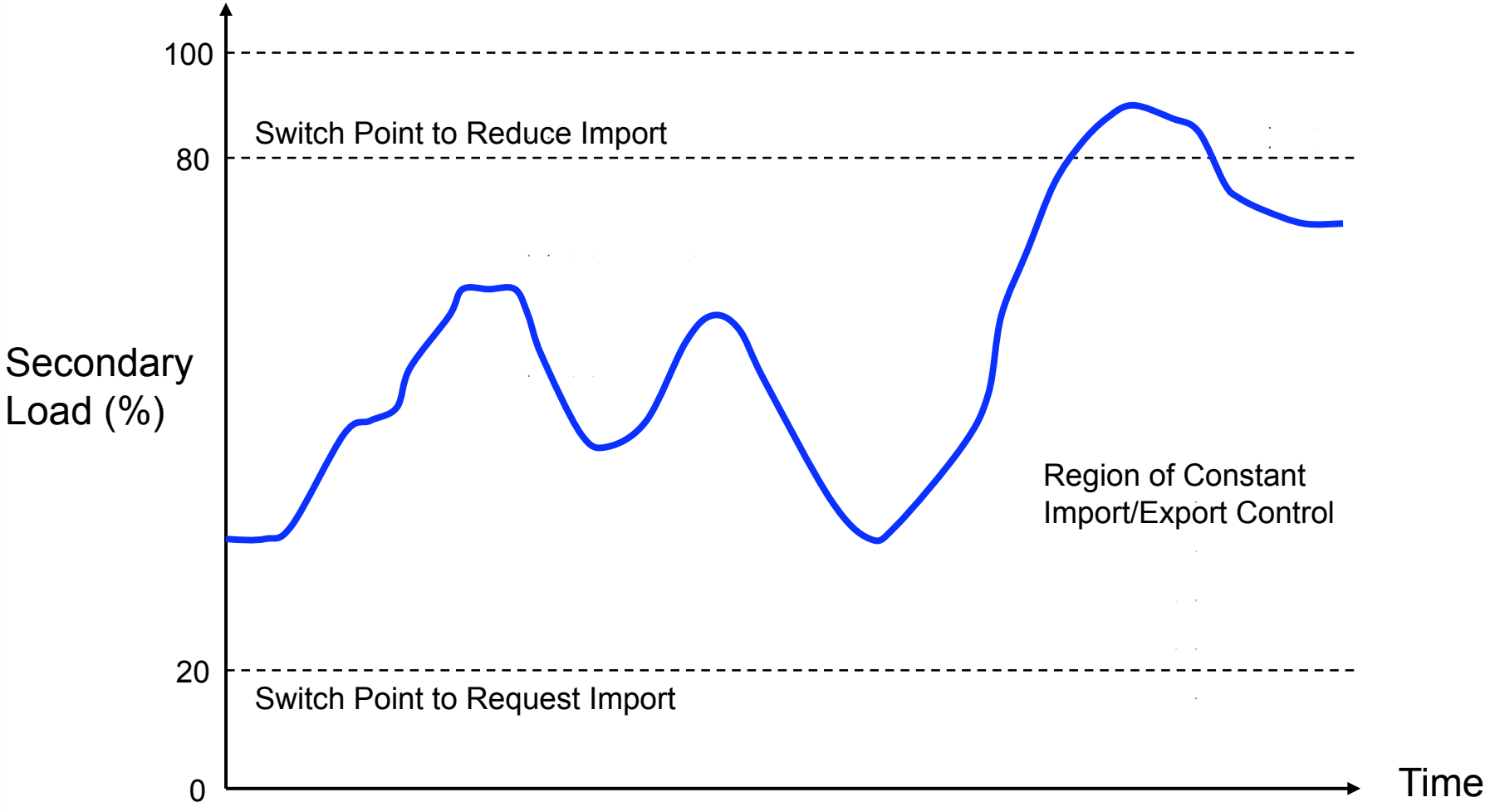

Secondary Load Controller with CHP Transient Response Examples

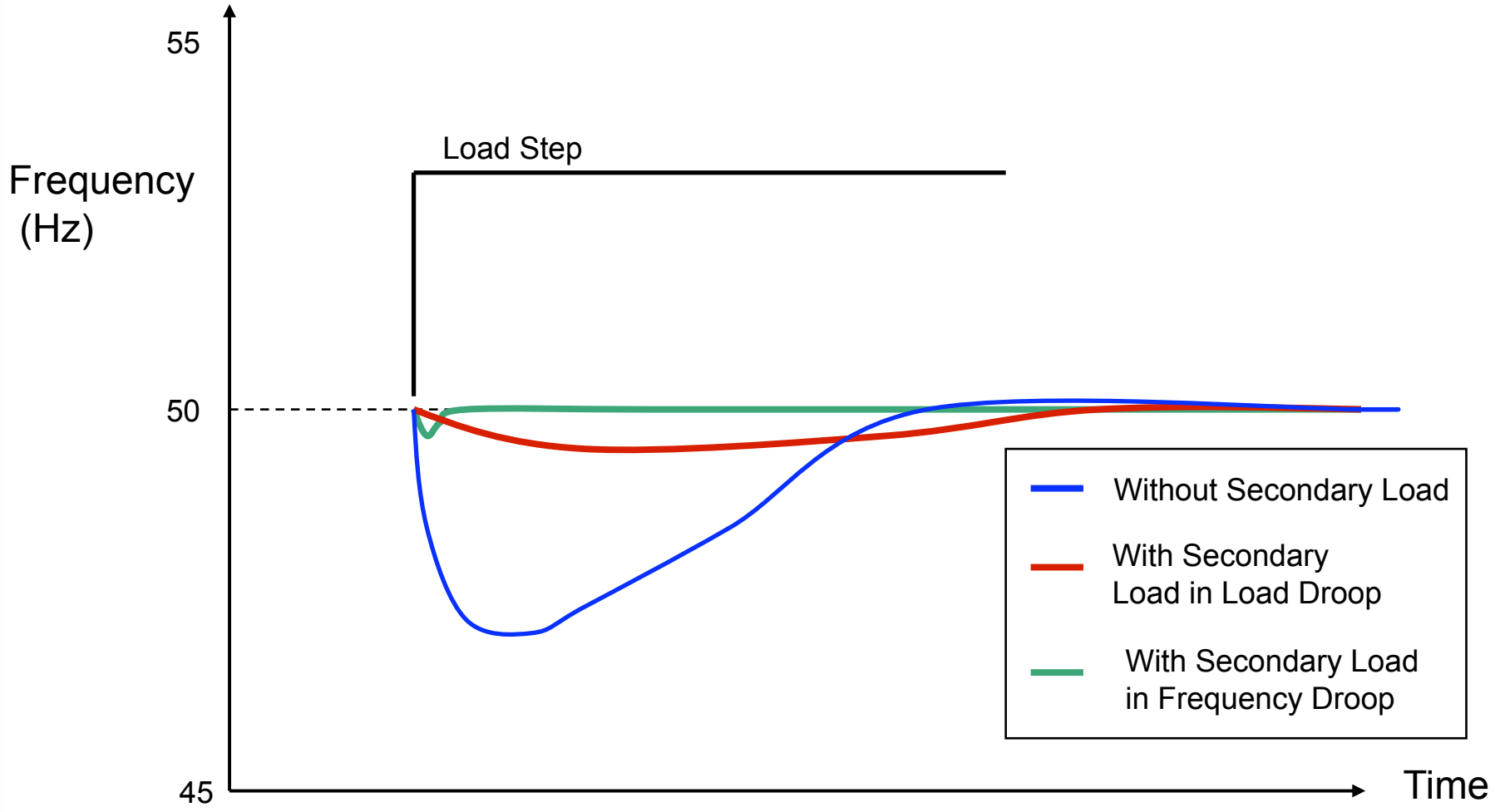

Validation at InteGrid Test and Development Lab

- The InteGrid Lab is hosted in Colorado State University's Engines and Energy Conversion Laboratory in Fort Collins, CO
- Jointly Owned and Operated by Spirae and CSU

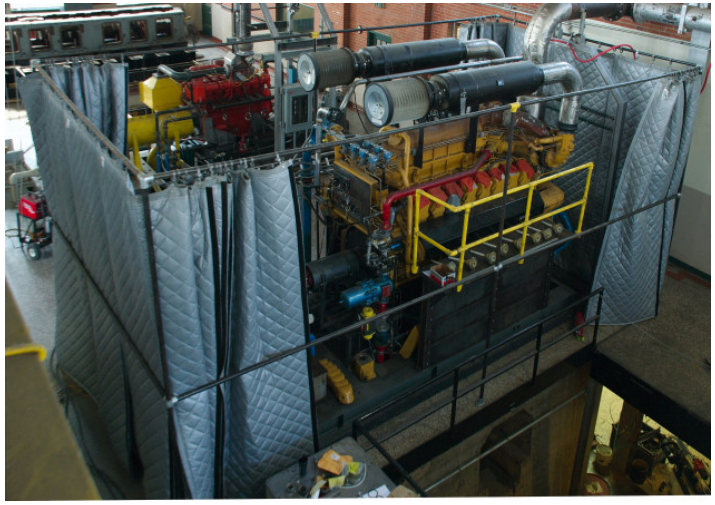

InteGrid
Test and Development Laboratory

The InteGrid Lab Models Networks with Renewables and DG

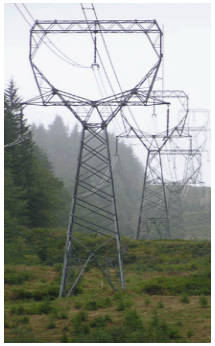

Transmission Connection

Sub-station

Distributed Generation

Wind

User Loads

Major components in a power system

Equipment in the Grid Simulation Lab (Scaled Model)

Grid Interconnect

Switchgear up to 1300 KW

NG Gensets
170 KW

WT Sim
125 KW

400 KW 0.8 PF

GSL Online

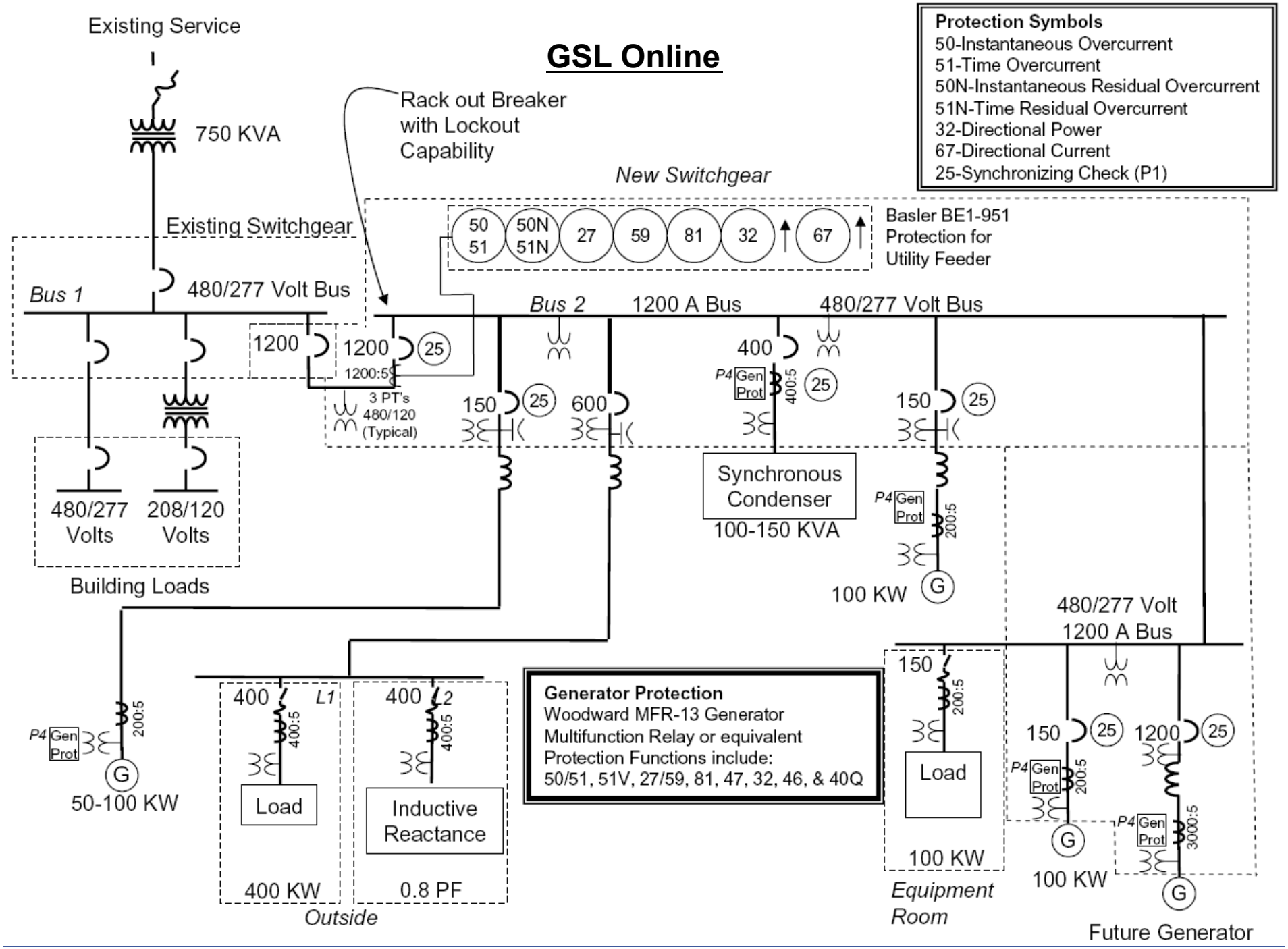
Protection Symbols
50-Instantaneous Overcurrent
51-Time Overcurrent
50N-Instantaneous Residual Overcurrent
51N-Time Residual Overcurrent
32-Directional Power
67-Directional Current
25-Synchronizing Check (P1)
Existing Service
750 KVA
Rack out Breaker with Lockout Capability
New Switchgear
Existing Switchgear
50 51
50N 51N
27
59
81
32
67
Basler BE1-951 Protection for Utility Feeder
Bus 1
480/277 Volt Bus
Bus 2
1200 A Bus
480/277 Volt Bus
1200
1200
25
1200:5
3 PT's 480/120 (Typical)
150
25
600
400
P4 Gen Prot
400:5
25
150
25
Synchronous Condenser
100-150 KVA
P4 Gen Prot
200:5
100 KW
G
480/277 Volts
208/120 Volts
Building Loads
480/277 Volt 1200 A Bus
P4 Gen Prot
200:5
G
50-100 KW
400
L1
400:5
Load
400 KW
400
L2
400:5
Inductive Reactance
0.8 PF
Outside
Generator Protection
Woodward MFR-13 Generator Multifunction Relay or equivalent
Protection Functions include:
50/51, 51V, 27/59, 81, 47, 32, 46, & 40Q
150
200:5
Load
100 KW
Equipment Room
150
25
1200
25
P4 Gen Prot
200:5
G
100 KW
P4 Gen Prot
3000:5
G
Future Generator

Switch Gear – Substation Emulation

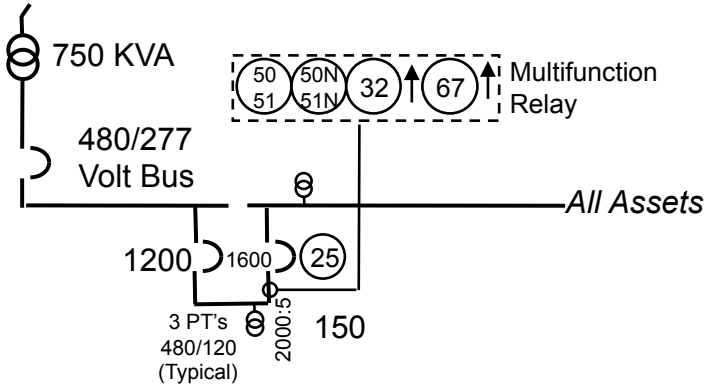

- 1600 A / 480 V /60 Hz Service
- Central connect for all assets – automated breakers for synchronized resources
- 1600 A tie breaker with Basler protective relay
- Cable interconnect via overhead cable tray

Load Bank – User Load Emulation

- 400 KW / 0.8 PF LoadTec air-cooled load bank
- Software & controls to emulate up to 8 feeders

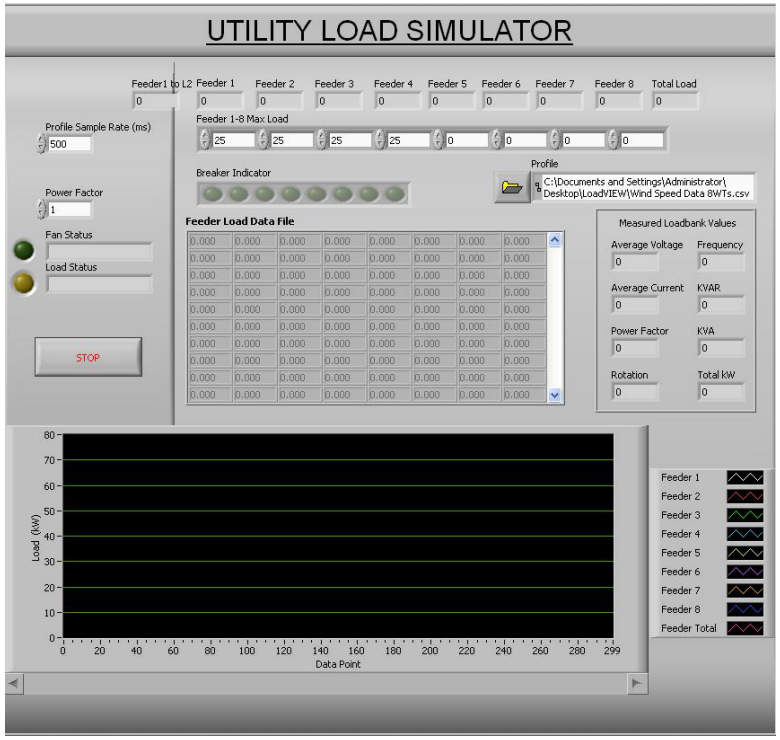

Synchronous Generators – CHP Emulation

- **2 Onan 80KW synchronous generators**
  - Turbo-charged natural gas engines
  - Same controls as utility-class gensets

- **Basler automatic voltage regulator**
- **Woodward governors & engine controls**
- **PLC supervisory controls**

Wind Turbine Simulation

- Cummins Diesel
- WEG Induction motor generator
- 125 KW Rating
- Software and controls to emulate up to 4 wind turbines
- PLC Controls

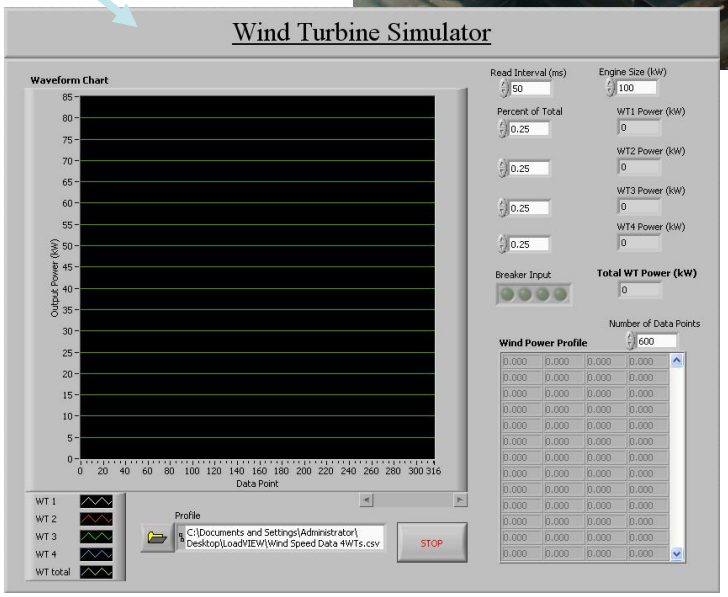

Reactive Power Control – Synchronous Condenser

- 125 KVAR Kato synchronous generator
- Starting motor
- Basler automatic voltage regulator
- Areva dual tap power meter
- PLC controls

Real Power Control – Secondary Load Controller

- **100 KW fast load controller**
  - 1 cycle update rate
  - Isochronous Frequency control
  - Baseload with Frequency Droop
- **Water-cooled load bank**
  - Binary array of resistive heating elements

Grid Simulation Lab – Layout

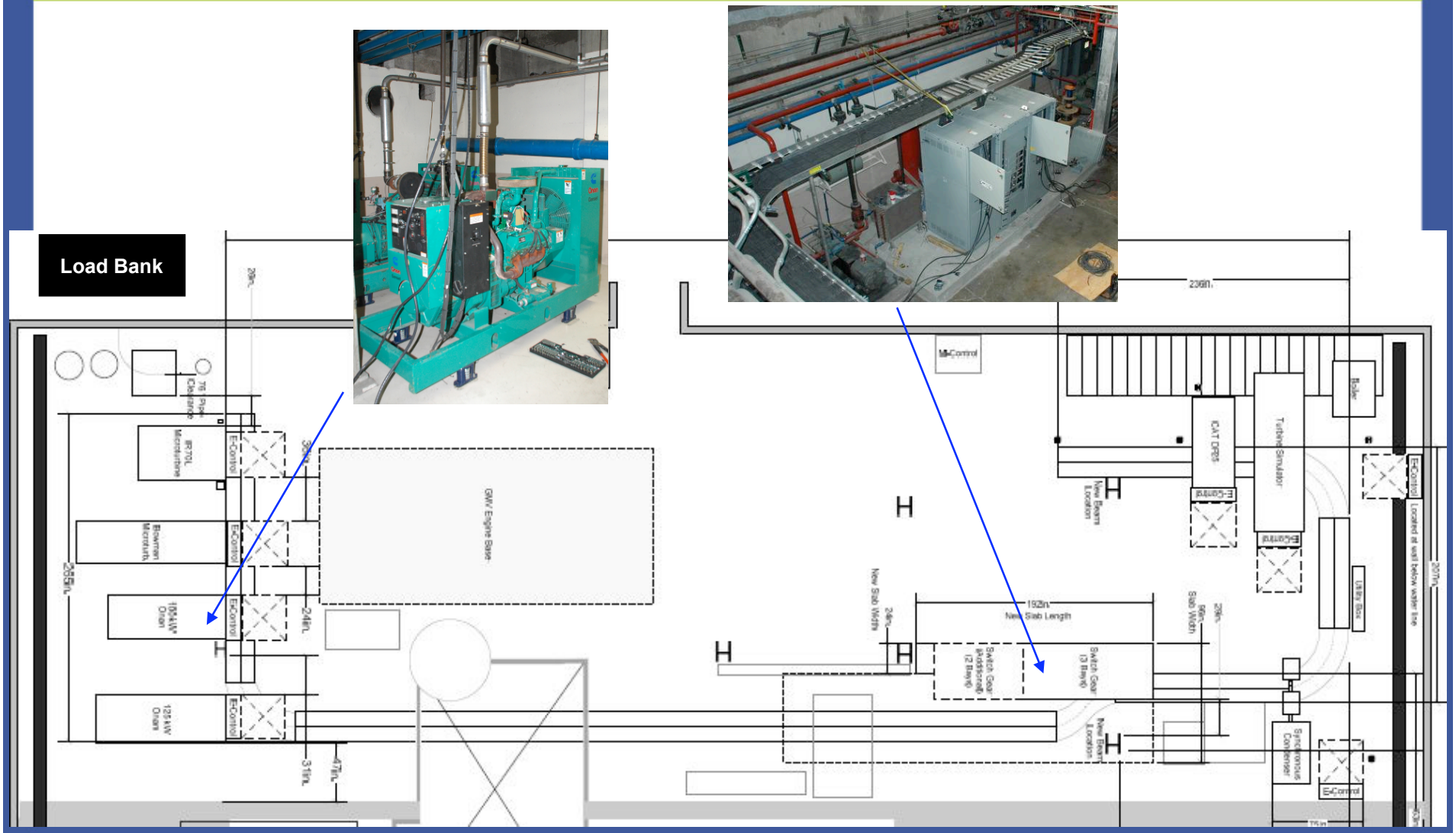

Island mode Gen Performance with large wind and load variations

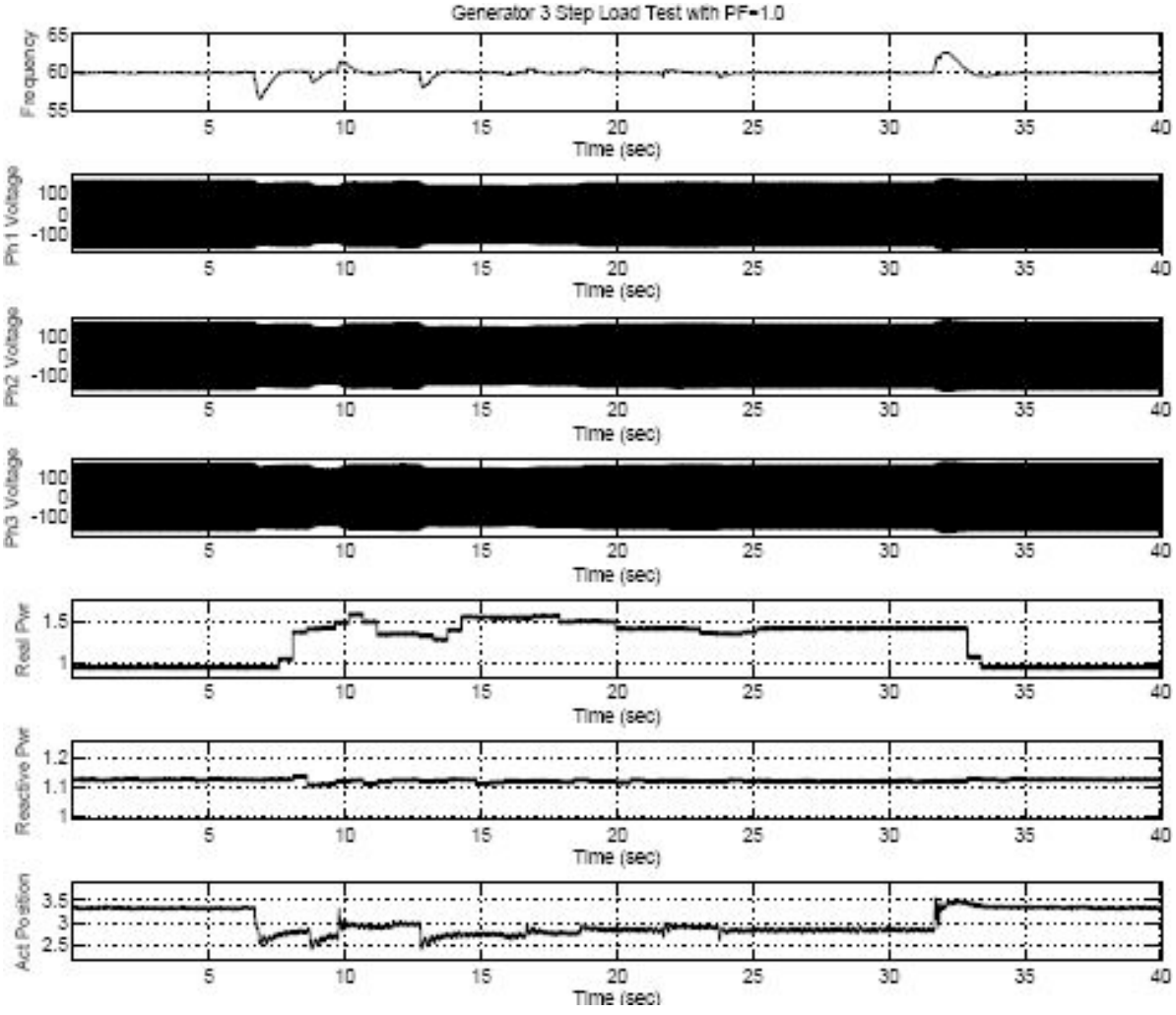

Island mode SLC Performance with large wind variations

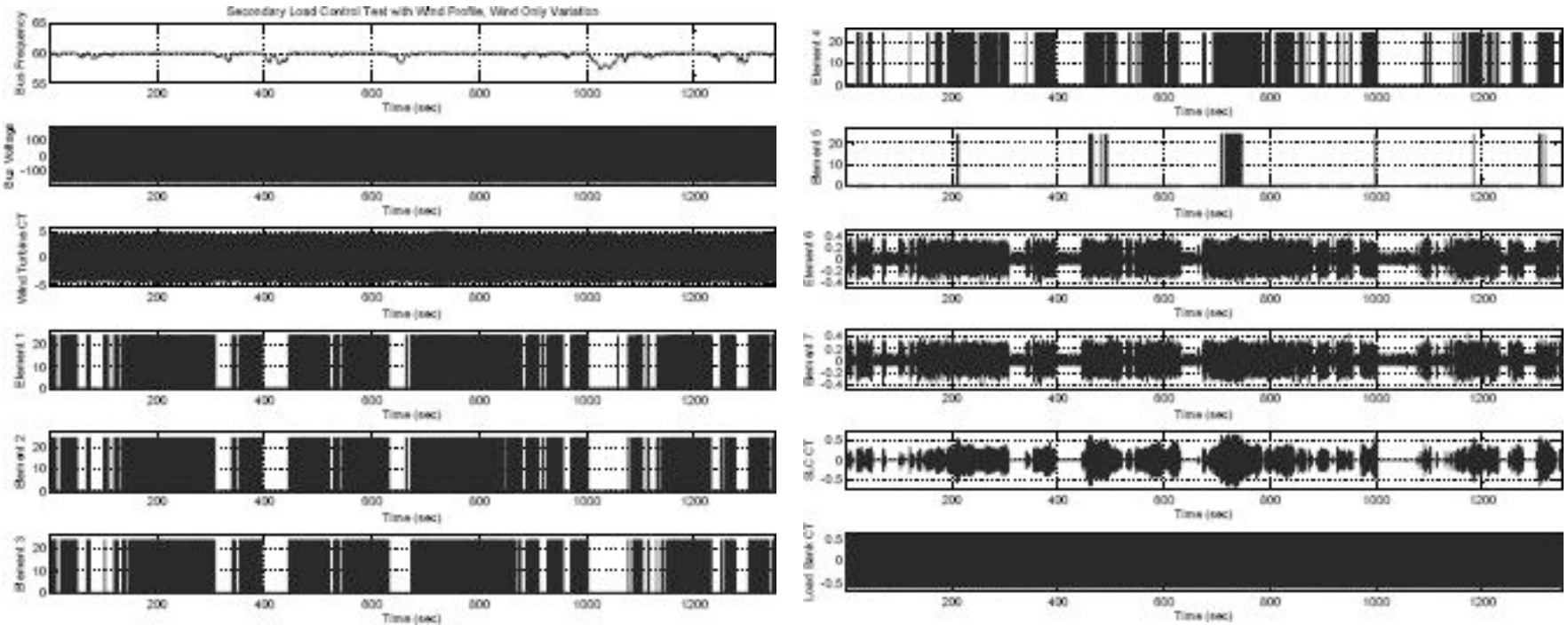

Software Power System Simulation

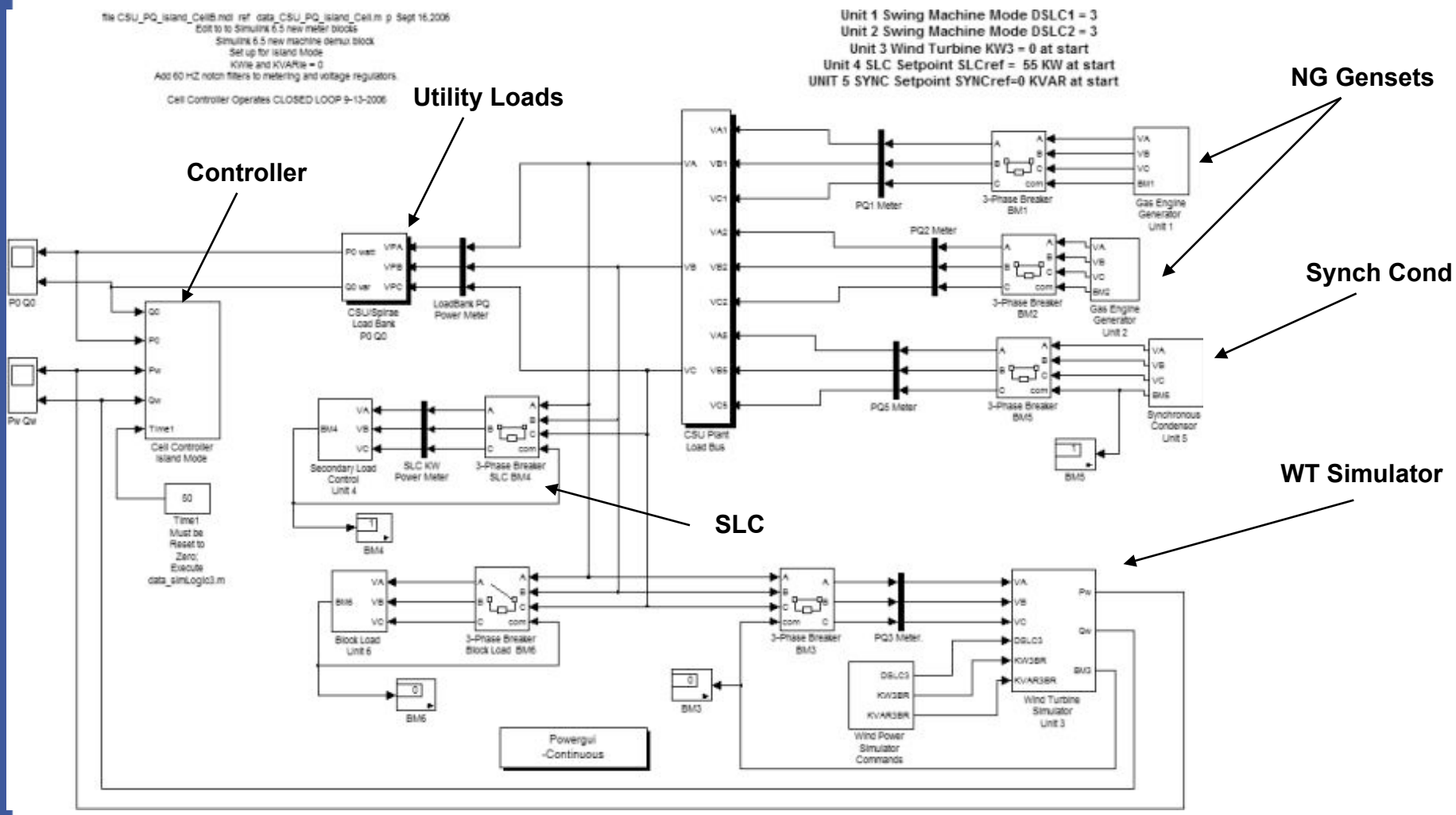

Technical Validation and Scalability Testing

The InteGrid Lab is used to:

- Set up a scaled ***physical model*** of distribution network with renewables and other embedded generation
- Evaluate Equipment and Controller Performance
- Set up ***software simulation*** of distribution network with renewables and other embedded generation
- Validate model performance against lab performance
- Scale up the simulation to cover region of interest, evaluate system performance, and assist system operators with large scale DER deployment

Q&A

Thank you for your attention!

Larry L. Adams
Spirae, Inc.
255 Linden St., Suite 201
Fort Collins, CO 80524
www.spirae.com
(970) 484-8259
ladams@spirae.com
Direct: (970) 420-5185