July 20, 2007

Mr. Charlie Sink
Director, Enterprise and Trust Services
Chugachmiut
A Tribal Organization Serving the Chugach Native Peoples of Alaska
1840 Bragaw Street, Suite 110
Anchorage, AK 99508-3463

Dear Mr. Sink:

Subject: Final Report Entitled "The Potential for Biomass District Energy Production in Chugachmiut Communities"; EERC Fund 9402

Enclosed please find the subject report. If you have questions or comments, please contact me by phone at (701) 777-5013, by fax at (701) 777-5181, or by e-mail at kleroux@undeerc.org.

Sincerely,

Kerryanne M. B. Leroux
Research Engineer

KMBL/sah

Enclosure

THE POTENTIAL FOR BIOMASS DISTRICT ENERGY PRODUCTION IN CHUGACHMIUT COMMUNITIES

Final Report

Prepared for:

Mr. Charlie Sink

Chugachmiut
A Tribal Organization Serving the Chugach Native Peoples of Alaska
1840 Bragaw Street, Suite 110
Anchorage, AK 99508-3463

Prepared by:

Kerryanne M. B. Leroux
Kirk D. Williams
Sheila K. Hanson
Erick J. Zacher

Energy & Environmental Research Center
University of North Dakota
15 North 23rd Street, Stop 9018
Grand Forks, ND 58202-9018

2007-EERC-07-07 July 2007

EERC DISCLAIMER

LEGAL NOTICE This research report was prepared by the Energy & Environmental Research Center (EERC), an agency of the University of North Dakota, as an account of work sponsored by Chugachmiut. Because of the research nature of the work performed, neither the EERC nor any of its employees makes any warranty, express or implied, or assumes any legal liability or responsibility for the accuracy, completeness, or usefulness of any information, apparatus, product, or process disclosed or represents that its use would not infringe privately owned rights. Reference herein to any specific commercial product, process, or service by trade name, trademark, manufacturer, or otherwise does not necessarily constitute or imply its endorsement or recommendation by the EERC.

THE POTENTIAL FOR BIOMASS DISTRICT ENERGY PRODUCTION IN CHUGACHMIUT COMMUNITIES

ABSTRACT

This project was a collaboration between The Energy & Environmental Research Center (EERC) and Chugachmiut – A Tribal Organization Serving the Chugach Native People of Alaska and funded by the U.S. Department of Energy (DOE) Tribal Energy Program. It was conducted to determine the economic and technical feasibility for implementing a biomass energy system to service the Chugachmiut community of Port Graham, Alaska. The Port Graham tribe has been investigating opportunities to reduce energy costs and reliance on energy imports and support subsistence. The dramatic rise in the prices of petroleum fuels have been a hardship to the village of Port Graham, located on the Kenai Peninsula of Alaska. The Port Graham Village Council views the forest timber surrounding the village and the established salmon industry as potential resources for providing biomass energy power to the facilities in their community. Benefits of implementing a biomass fuel include reduced energy costs, energy independence, economic development, and environmental improvement. Fish oil–diesel blended fuel and indoor wood boilers are the most economical and technically viable options for biomass energy in the village of Port Graham. Sufficient regional biomass resources allow up to 50% in annual heating savings to the user, displacing up to 70% current diesel imports, with a simple payback of less than 3 years for an estimated capital investment under $300,000. Distributive energy options are also economically viable and would displace all imported diesel, albeit offering less savings potential and requiring greater capital. These include a large-scale wood combustion system to provide heat to the entire village, a wood gasification system for cogeneration of heat and power, and moderate outdoor wood furnaces providing heat to 3–4 homes or community buildings per furnace. Coordination of biomass procurement and delivery, ensuring resource reliability and technology acceptance, and arbitrating equipment maintenance mitigation for the remote village are challenges to a biomass energy system in Port Graham that can be addressed through comprehensive planning prior to implementation.

TABLE OF CONTENTS

LIST OF FIGURES iii

LIST OF TABLES iv

EXECUTIVE SUMMARY v

INTRODUCTION 1

BACKGROUND 1

GOALS AND OBJECTIVES 3

APPROACH 3

RESULTS 4
- Port Graham Energy Load 4
  - Current Energy Infrastructure 5
  - Biomass Energy Scenarios Studied and Load Requirements 8
- Port Graham Resources 11
- Energy Technologies and Equipment 12
  - Feedstock Preparation Technology 12
  - Combustion Energy Systems 15
  - Gasification Energy Systems 19
  - Utilization of Fish Oil Fuel in Existing Infrastructure 20

ECONOMICS 21
- Feedstock Preparation Cost 21
- Capital Investment 23
- Operating Expenses 26
- Potential Savings and Payback 27
- Emissions 31

DISCUSSION 32
- Energy Load and Biomass Resources 32
- Technology Issues 33
- Economic Observations 34

CONCLUSIONS 37

NEXT STEPS 38

Continued…

TABLE OF CONTENTS, continued

REFERENCES 39

PORT GRAHAM SYSTEMS AND COMMUNITY PICTURES ..... Appendix A

DETAILED SCENARIOS AND REQUIREMENTS ..... Appendix B

SENARIO LAYOUTS ..... Appendix C

VENDORS AND DESIGNS ..... Appendix D

ECONOMIC CALCULATIONS ..... Appendix E

STATE EMISSIONS STANDARDS ..... Appendix F

LIST OF FIGURES

1 Kenai Peninsula, Alaska 2

2 The village of Port Graham, Alaska 6

3 Port Graham Power Plant. 8

4 Wood chip production using a portable diesel grinder 14

5 Example of wood pellet process. 14

6 Greenwood indoor wood boiler 17

7 Pro-Fab wood, or pellet outdoor furnace. 17

8 Wood Doctor outdoor wood furnace. 18

9 Example of typical system configuration; Messersmith wood combustion system 18

10 Chiptec gasifier and boiler system 19

11 EERC-designed wood chip gasification system. 20

12 Sensitivity of estimated savings and payback for the large fish oil and the indoor wood boiler scenarios 30

13 Comparative sensitivity of estimated savings for the large fish oil and the indoor wood boiler scenarios 31

14 Variation in wood chip, pellet, and fish oil cost with respect to production. 35

LIST OF TABLES

1 Estimated Energy Load and Diesel Consumption in Port Graham 7

2 Current HEA Electricity Rates 8

3 Estimated Electrical Load and Expense for Port Graham 9

4 Potential Energy Scenarios and Load Requirements for the Village of Port Graham 10

5 Timber Resource for Potential Fuel Utilization 11

6 Feedstock Options for Presented Scenario Systems..... 13

7 Examples of Combustion Systems 16

8 Feedstock Cost for Each Energy Scenario 22

9 Breakdown of Wood Procurement Costs 23

10 Estimated Capital Investment for Indoor and Outdoor Wood Heating Systems 25

11 Estimated Capital Investment for Gasification Systems of Various Scenarios Studied 25

12 Estimated Costs of Gas and Electric Boilers or Furnaces Used for Gasification Scenario Capital Investment Calculations..... 26

13 Estimated Operating Costs for Port Graham Energy Scenarios..... 27

14 Economic Summary of Port Graham Energy Scenarios Studied..... 28

15 Economic Summary of Port Graham Energy Scenarios Studied..... 29

16 Potential Feedstock Costs for Port Graham Resources..... 34

17 Comparison of Large Fish Oil and Indoor Wood Boiler Scenarios..... 37

THE POTENTIAL FOR BIOMASS DISTRICT ENERGY PRODUCTION IN CHUGACHMIUT COMMUNITIES

EXECUTIVE SUMMARY

A collaboration between The Energy & Environmental Research Center (EERC) and Chugachmiut – A Tribal Organization Serving the Chugach Native People of Alaska, through the U.S. Department of Energy (DOE) Tribal Energy Program, this project was conducted to determine the economic and technical feasibility for implementing a biomass energy system to service the Chugachmiut community of Port Graham, Alaska. The forest timber surrounding the village and the established salmon industry are seen as potential biomass fuel resources to reduce energy costs and reliance on imports and support subsistence in the Chugachmiut community. Other benefits of implementing a biomass fuel include economic development and environmental improvement. To satisfy the project goal, the EERC performed load evaluation, resource data analysis, energy and cogeneration technology evaluation, and economic analyses for the Port Graham village.

An ample supply of biomass can be procured from underutilized forest region surrounding Port Graham and from fishery activities to satisfy the energy needs of Port Graham. About 5000 tons (71,000 MMBtu) per year is available within ¼-mile of existing timber roadways. Salmon oil can also be processed from whole fish or generated waste for use as fuel and is available depending on annual harvesting or processing yields. Currently, about 78,000 gallons diesel are imported to supply an average of 6 MMBtu/hr heat to community buildings and residences and 560 kW for industrial energy via diesel generators. The Homer Electric Association provides 260 kW for all village structures and partial industrial operations. About 9,000 MMBtu and 2000 MWh (16,000 MMBtu combined) in heat and electricity, respectively, are consumed by the village annually, costing the community an estimated $470,000 for energy per year.

The most economically viable options for Port Graham are utilization of a fish oil–diesel fuel and the installation of indoor wood boilers. Estimated capital investments are about $260,000 for fish oil-processing equipment and for the delivered and installed boilers. Annual savings and the simple payback periods are about $80,000 and 2–3 years, respectively. User savings could be up to 50% current heating expenses. Fish oil can be blended up to 50% with diesel for use in the existing boilers and furnaces. Approximately 42,000 gallons of fish oil or 630 tons fish/waste annually would be required to provide fish oil blended fuel to the entire village. An average 630 tons of logs would be needed annually for installed indoor wood boilers serving individual village buildings or homes. Differences in the implementation of a indoor wood boiler scenario (Table A-1) include enhanced economy, 70% diesel displacement, and potential for increased particulate emissions. Other economically feasible biomass technology applications include individual, shared, and full-scale wood combustion systems for heat and industrial processing, wood gasification electricity production and cogeneration, and a fish oil–diesel fuel without change to the current infrastructure. Exceptions were distributive heat supplied by steam or syngas and the generation of electric heat and power.

Table ES-1. Comparison of Fish Oil and Indoor Wood Boiler Biomass Energy Scenarios

Scenario	Fish Oil Fuel	Indoor Wood Boilers
Advantages	• Installation of one system and process • Utilization of existing equipment and technology • No operational changes to fuel user	• Resource reliability and cost stability • Lower risk in event of one system breakdown • Opportunity for economic growth with development of feedstock infrastructure • Offers greater diesel displacement
Disadvantages	• Resource reliability and cost stability • Greater risk in event of one system breakdown	• Installation of many systems • New heating equipment and technology • Fuel user must manually attend boiler for feed and ash removal • Potential particulate emissions

A biomass energy scenario should be discussed by the community to ensure acceptance of the chosen technology. Potential issues beyond economics are manual operation for wood systems and the ability to sustain equipment maintenance. An approach plan should then be derived. Recommended steps for implementation of a biomass energy system include a formal engineering design and quote, including guarantee or proof of emissions compliance for wood systems, secured financing, equipment procurement and installation, personnel hire and training, coordination of feedstock storage and delivery, and blending equipment for fish oil fuel or an ash disposal plan for wood systems. The community of Port Graham must remain diligent in the execution of a biomass energy plan to reduce diesel imports and support subsistence.

THE POTENTIAL FOR BIOMASS DISTRICT ENERGY PRODUCTION IN CHUGACHMIUT COMMUNITIES

INTRODUCTION

A collaboration between The Energy & Environmental Research Center (EERC) and Chugachmiut – A Tribal Organization Serving the Chugach Native People of Alaska, through the U.S. Department of Energy (DOE) Tribal Energy Program, this project was conducted to determine the economic and technical feasibility for implementing a biomass energy system to service Chugachmiut communities. Chugachmiut has been assisting the tribes of the Chugach region, which extends from the Prince William Sound to the lower Cook Inlet of the Kenai Peninsula, Alaska, with self-determination and exploration of their natural resources. The village council of Port Graham has long been advocating biomass energy to support subsistence living and cultural preservation.

The dramatic rise in the prices of petroleum fuels is a hardship to the Chugach village of Port Graham, located on the southern tip of the Kenai Peninsula on the lower Cook Inlet (Figure 1). The village is accessible only by air or water, making traditional energy sources expensive to deliver and alternative energy technologies difficult to implement. However, there is a significant potential for biomass heat and power within the region by utilizing low-value forest residue and timber damaged by severe weather.

Biomass technology solutions for Port Graham were identified based on the economic viability of a biomass fuel, the suitability of technologies to the village culture, and the availability of a biomass resource to supply the required energy loads. An optimal biomass resource–technology combination or scenario can be determined by comparing the savings estimated from current expenses, as well as the expected capital investment payback period, for each alternative energy scenario. Commercially available technologies, such as combustion and gasification, will have greater success in the remote village. Although biomass could provide energy to the community at a lower cost than petroleum fuels, availability and procurement costs are often the limiting factors to a feasible solution.

BACKGROUND

The Port Graham tribe has been investigating opportunities to reduce energy costs and reliance on imports. Comprising about 200 persons primarily of Altuiiq descent (U.S. Census Bureau, 2000), the community has experienced a steady rise in its utility costs over the last 5 years, doubling in the past decade (Energy Information Administration, 2007). Utility expenses are consuming increasingly more of the budgets for each program or business in the community. The village is 30 air miles south of Homer (200 air miles from Anchorage) and is not connected to a road system, accessible only by boat or airplane. Electricity, fuel, some foods, goods, and services must be imported into the community, putting a strain on efforts for a self-sufficient culture.

Figure 1. Kenai Peninsula, Alaska.

The Port Graham Village Council views the forest timber surrounding the village and the established salmon industry as potential resources for providing biomass energy power to the facilities in their community. A timber inventory was conducted by Chugachmiut, identifying approximately 40,000 acres of timber located on Port Graham Corporation land near the village. This resource was actively harvested through the 1990's and exported to Japan but is no longer marketed because of competition with Russian exports. Salmon fishing and processing are significant components to subsistence activities in Port Graham. These fishery activities are currently ongoing in the village. Utilization of low-value forest residue and timber damaged by

severe weather, i.e., waste materials, and salmon wastes generated from local processing are of particular interest to the community.

Benefits of implementing a biomass fuel include reduced energy costs, energy independence, economic development, and environmental improvement. Biomass resources tend to cost considerably less than petroleum fuels, providing savings to the user, which can be used to finance the capital investment. Utilization of local resources for energy assists in the reduction of imports into the community, promoting sustainability for the tribe. Economic advantages will result from the use of biomass as a fuel by increasing jobs through the harvesting of wood resources, power plant personnel, and system maintenance activity. Environmental emissions associated with the burning of fuel oil will decrease, and combusting biomass will provide a net zero gain of carbon dioxide to the atmosphere (Engström, 1999; Dayton, 2002; Fernando, 2005).

GOALS AND OBJECTIVES

The goal of this project was to determine the economic and technical feasibility for implementing a biomass energy system to service the Chugachmiut community of Port Graham. In general, the project considered the potential for a biomass energy facility to provide heat and power to Port Graham. This was achieved by completing the following objectives:

- Evaluation of Port Graham energy loads
- Analysis of biomass resource availability and suitability
- Evaluation of energy and cogeneration technologies
- Determination of engineering economics of proposed technologies

APPROACH

To accomplish the objectives, the EERC performed load evaluation, resource data analysis, energy and cogeneration technology evaluation, and economic analyses for the Port Graham village. The specific matching of resources, technology, and energy loads provided the information needed to compare options on an economic basis and determine the most viable option for Port Graham.

Members of the project team visited the village to obtain pertinent information concerning energy loads in the village. Community buildings were identified and energy systems were investigated and recorded. Tribal council members and Chugachmiut representatives present provided information needed to perform load and economic calculations in the industry sector. Pictures of Port Graham energy systems and community buildings can be viewed in Appendix A.

Data was assembled by Chugachmiut regarding the forested resource located in Port Graham, and fish oil information was provided by the Port Graham Hatchery. This data was analyzed to determine annual supply and cost of procurement. Densification of the wood into wood chips or pellets was considered for ease of use, transportation, and increased efficiency.

Fish oil was also reviewed as a potential biomass resource because of the established salmon industry in Port Graham.

Several technologies (e.g., combustion, gasification, liquid biomass fuel) and a variety of size applications were considered for Port Graham energy production and cogeneration. Combustion systems are commercially available and vary in size from small indoor wood boilers for individual use to full-scale units capable of supplying heat to the entire village. Gasification is an alternative option which can be implemented to supply heat via syngas production, generate electricity using a microturbine, or provide both heat and electricity through cogeneration. Liquid biomass sources can be used to replace diesel and reduce consumption without modification of the existing infrastructure.

Finally, an engineering economic feasibility analysis was performed to evaluate the technologies and applications. The analysis was based on savings from current fossil fuel and electricity costs, including estimation of capital, operational, and feedstock costs. The estimated savings were used to calculate a simple payback period for financing expenses. Sensitivity of the savings and payback were tested for changes in feedstock cost, petroleum fuel price, and capital investment. Emissions control standards and mechanical constraints of a remote location were also considered.

RESULTS

The small scale of the village and sufficient regional biomass resources allow up to 20% in annual energy savings through several arrangements of commercially available technologies to supply distributive heat, electrical, or cogeneration energy for individual village buildings, multiple buildings, or the entire village. Currently, diesel must be imported to heat community buildings and residences. The Homer Electric Association provides single-phase electricity to all village structures and partial industrial operations. Additional industrial energy needs, i.e., 3-phase power, are supplied by diesel generators. Biomass preparation technologies, solid biomass combustion and gasification, and utilization of a biomass fuel in existing equipment, are technically applicable for displacing current Port Graham energy sources. An adequate supply of wood can be procured from the underutilized forest region surrounding Port Graham for energy production in the village. Salmon oil, processed from whole fish or generated from processing waste fish, can be blended with diesel for use in the present energy infrastructure (available depending on annual fish harvesting yields). Economically viable biomass energy applications are individual, shared, and full-scale wood combustion systems for heat and industrial processing; wood gasification electricity production and cogeneration; or a fish oil–diesel fuel without change to the current infrastructure. Exceptions were scenarios involving distributive heat from steam or syngas and heat and power supplied solely by electricity.

Port Graham Energy Load

An array of biomass energy scenarios was developed to match Port Graham energy needs, up to 6 MMBtu/hr and 560 kW for heat and power, respectively. About 9100 MMBtu/yr is currently consumed in diesel to heat residences and community buildings while using 2000

MWh annually for village electricity and industrial processing. Energy scenarios vary in application and technology from heating systems serving individual structures to distributive cogeneration for the entire village.

Current Energy Infrastructure

Energy in Port Graham is supplied by 78,000 gallons of diesel annually and 260 kW electricity, costing the village about $470,000 per year in utilities. Energy requirements include heat for residences and community buildings and electricity for industrial processing and all village structures. Diesel is the primary source of heating energy and is also used in stationary generators for local electricity production for industrial processing. Electrical power is supplied by a the Homer Electric Association (HEA). A local power plant houses four diesel generators for use during electrical outages. The following section details the estimated current energy load and costs for Port Graham.

Village structures, totaling 90,000 sq ft, require heating during the long Alaskan winter season, and the village salmon cannery utilizes electrical power for operations during the summer fishing season (May–August). Major sources of heat load from Port Graham community buildings include the following: school (8000 sq ft), tribal council building (3600 sq ft), clinic (4000 sq ft), native corporation office (1600 sq ft), and grocery store (2800 sq ft). About 70 homes accommodate Port Graham's small population, with an estimated average of about 1000 sq ft each. Although a majority of homes are heated by forced air, some use hot water for heating. In addition, most residences contain wood stoves, using them for heat when diesel prices become too costly for the resident. The cannery was not in operation the past year because of marketing issues for the canned salmon product. The cannery utilizes a Kohler G00ROZD4 555-kW Intercool generator to provide 3-phase electricity during day/run time; local electricity is used for evening–night/downtime. About 20,000–25,000 gallons diesel are consumed annually for operation. A fire-tube steam boiler also exists in the industrial section of the village; the boiler has also not been in use and would require refurbishing before it would be safe for operation. A layout of the village is provided in Figure 2.

A heating load of 6 MMBtu/hr was estimated for all selected structures in the village, consuming approximately 78,000 gallons diesel per year and costing the village about $234,000 annually. A summary of calculations is provided in Table 1. Diesel is delivered to the village via barge and used for all village building and residential heating, as well as cannery daytime operations. The average diesel price in Alaska for 2006 was about $3.00 per gallon (Energy Information Administration, 2007). As a single structure, the cannery requires the most energy for processing operations. About 4.5 MMBtu/hr is needed, assuming a 3-month season and an average of 8 hrs per day. Estimation of heating requirements for community buildings and residences was based on the area to be heated and estimated to be about 53,000 gallons per year and cost $159,000 annually. Thus the average home consumes about 600 gallons diesel during the winter season, costing the owner an average $2000 in annual heating. An estimated 1.3 MMBtu/hr is needed to heat the community buildings at about $35,000 for 12,000 gallons diesel annually. It is assumed that a system designed to serve the heating needs of village buildings and homes in winter months would be sufficient for cannery-processing energy needs in summer months.

Figure 2. The village of Port Graham, Alaska.

Table 1. Estimated Energy Load and Diesel Consumption in Port Graham

	Building Heat Requirements*			Current Conditions	
Structure	Heating Area, sq ft	Power Required, Btu/hr	Annual Energy Usage, MMBtu/yr	Diesel, gal	Annual Heating Cost
Average Home	1000	65,000	65	591	$1770
Total Residential (70 units)	70,000	4,550,000	4550	41,300	$124,000
School	8000	520,000	520	4720	$14,200
Clinic	4000	260,000	260	2360	$7090
Tribal Council Building	3600	234,000	234	2130	$6380
Native Corporation Office	1600	104,000	104	945	$2830
Grocery Store	2800	182,000	182	1650	$4960
Total Village Buildings	20,000	1,300,000	1300	11,800	$35,400
Total Village Buildings and Residences	90,000	5,850,000	5850	53,100	$159,000
Cannery	–	4,500,000	3240	25,000	$75,000
Total Heat Load	**90,000**	**5,850,000**	**9090**	**78,100**	**$234,000**

*Assumes 65 Btu/hr/sq ft, 1000 hr heating required, and energy required to heat village buildings and homes in winter months is available for cannery processing in summer months.

An electrical peak demand of 260 kW is supplied to Port Graham by HEA via the Bradley Lake Hydroelectric Plant at the head of Kachemak Bay northeast of Homer, Alaska. The power line into Port Graham supplies only single-phase electricity but can accommodate 3-phase. Prior to the construction of the Bradley Lake power lines, HEA housed diesel generators in Port Graham. Once the construction was completed, the Port Graham Village Corporation assumed management and operation of the equipment and building. New equipment was purchased to provide downtime power for the cannery and backup power for Port Graham and the nearby village of Nanwalek in the event of a power failure. HEA purchases diesel from the Corporation to operate the generators when power is down. Figure 3 shows the power plant, which contains five generators: one CAT 3304 105 kW, three CAT 3406 260 kW, and a Cummins 250 kW. HEA provided the monthly residential, commercial, and industrial rates applicable to Port Graham consumers. The rates are summarized in Table 2.

Table 3 summarizes the calculations for estimated electrical cost and load in the village of Port Graham, totaling $234,000 and 2000 MWh per year, respectively. Costs were estimated using the rates provided in Table 2. Only the total annual estimate for electrical load could be obtained. Electricity consumption for residential and community structures was thus based on building size, estimated to be 1300 MWh per year and costing a collective $180,000 annually. Assuming an 8-hour working day, the power required during cannery downtime operation was estimated to be about 664,000, requiring $18,000 in annual electricity costs.

Figure 3. Port Graham Power Plant.

Table 2. Current HEA Electricity Rates (Homer Electric Association, 2007)

Charges and Parameters	Residential	Commercial	Industrial
Monthly Fee	$11	$40	$1200
Regulatory Charge, per kWh	$0.000433	$0.000433	$0.000433
Tier limit, kWh	600	3000	–
Tier price, per kWh	$0.12370	$0.12074	$0.05440
Price over limit, per kWh	$0.13073	$0.10876	
Demand limit, kW	–	10	–
Demand charge, per kW	–	$6.37740	$16.70876

Biomass Energy Scenarios Studied and Load Requirements

An assortment of biomass scenarios were considered for energy production based on a variety of biomass technology combinations to meet Port Graham load requirements, energy loads ranging from 65,000 Btu/hr to 6 MMBtu/hr and 300–2000 kW depending on system size for each scenario. Technologies and resource combinations include wood combustion, wood gasification, and fish oil as fuel in the existing infrastructure. This section describes the energy scenarios considered and the respective power requirements.

The scenarios include several arrangements of commercially available technologies and utilization of biomass resources at various sizes and production rates to supply energy for the

Table 3. Estimated Electrical Load and Expense for Port Graham

Structure	Building Area, sq ft	Current Electricity Conditions: Electricity Usage, kWh/yr	Av Electricity Usage, kWh/month	Av Electricity Cost, per month	Annual Electricity Cost
Average Home	1000	14,800	1240	$169	$2030
Total Residential (70 units)	70,000	1,040,000	86,600	$11,800	$142,000
School	8000	119,000	9900	$1240	$14,900
Clinic	4000	59,400	4950	$656	$7870
Tribal Council Building	3600	53,400	4450	$591	$7090
Native Corporation Office	1600	23,700	1980	$266	$3200
Grocery Store	2800	41,600	3460	$461	$5530
Total Village Buildings	20,000	297,000	24,700	$3210	$38,600
Total Village Buildings and Residences	90,000	1,340,000	111,000	$15,000	$181,000
Cannery	–	664,000	221,000	$17,700	$53,100
Total Electrical Load	**90,000**	**2,000,000**	**333,000**	**$32,700**	**$234,000**

village. Individual buildings may be heated by indoor wood boilers or outdoor wood furnaces. Outdoor wood furnaces are also capable of heating multiple homes or community buildings. Full-scale combustion and gasification systems can be designed to provide heat for the entire village. Gasification systems can also be designed to generate electricity or cogenerate heat and electricity. Another application considered was the potential to use fish oil as fuel in existing energy equipment. Table 4 provides an outline of the potential energy scenarios derived and summarizes the load requirements for each. A more detailed table describing each scenario is given in Appendix B.

The power demand for the systems proposed by each scenario varies from individual residential application (65,000 Btu/hr) to cogeneration energy (6 MMBtu/hr, 600 kW) or electrical power and heat (2 MW) supplied to the whole village. Load requirements for scenarios proposing individual systems, such as indoor wood boilers or small outdoor wood furnaces, were given in Tables 1 and 3 of the previous section. Heating loads from 65,000 Btu/hr for the average residence to an estimated 520,000 Btu/hr for the community school were estimated. The average residential system for serving multiple structures, about 3–4 homes depending on location, would require about 230,000 Btu/hr. A system for the clinic, tribal council building, and Native corporation office is estimated to be rated at 600,000 Btu/hr. It is assumed that individual outdoor wood furnaces are sufficient for the village grocery store and school, which are located more than 100 ft from the other community buildings. Systems serving heat to all village structures require a power rating of 6 MMBtu/hr, assuming the system will not be in use during the summer months and thus available for cannery operation. Under the same assumption, systems serving heat only to community buildings should be rated at 5 MMBtu/hr. Electrical demand is 300 kW for building and residential needs, as well as cannery downtime operation.

Table 4. Potential Energy Scenarios and Load Requirements for the Village of Port Graham (see Tables 1 and 3 for individual loads)

Scenario	Description/Application	Power Required	
		Heat, MMBtu/hr	Electrical[a], kW
I. Wood Combustion			
A. Wood Furnaces/Boilers			
1. Indoor Wood Boilers	Individual systems → hot water heat → village buildings, homes	0.065–0.52	–
2. Small Outdoor Wood Furnaces			
3. Moderate Outdoor Wood Furnaces	Moderate systems → hot water heat → serving multiple community buildings[b], homes (3–4)	Av home: 0.23 Community bldgs[b]: 0.60	–
B. Automated Combustion System			
1. Moderate Combustion System	Hot water heat → cannery, village buildings	5	–
2. Large-Scale Combustion System	Hot water heat → cannery, village buildings, homes	6	–
II. Wood Gasification System			
A. Gas Production			
1. Moderate Steam (Gas)	Syngas → steam boiler → cannery steam Steam heat → village buildings	5	–
2. Moderate Gas and Steam	Syngas → steam boiler → cannery steam Syngas → village buildings for heat	5	–
3. Large Gas	Syngas → steam boiler → cannery steam Syngas → village buildings, homes for heat	6	–
B. Gas and Electricity Production			
1. Moderate Steam and Electricity	Syngas → steam boiler → cannery steam Steam heat → village buildings Electricity generation (1-phase, 260 kW)	5	300
2. Moderate Gas, Steam and Electricity	Syngas → steam boiler → cannery steam Syngas → village buildings for heat Electricity generation (1-phase, 260 kW)	5	300
3. Large Gas and Electricity	Syngas → steam boiler → cannery steam Syngas → village buildings, homes for heat Electricity generation (1-phase, 260 kW)	6	300
C. Electricity Production			
1. High-Power Electricity and Heat	Electricity generation (3-phase, 560 kW) → heat	–	2000
2. High-Power Electricity	Electricity generation (3-phase, 560 kW)	–	600
3. Low-Power Electricity	Electricity generation (1-phase, 260 kW)	–	300
III. Fish Oil			
A. Moderate Steam (oil)	Blend → steam boiler → cannery steam Steam heat → village buildings	(not applicable; uses existing energy infrastructure)	
B. Moderate Oil and Steam	Blend → steam boiler → cannery steam Blend → village buildings for heat		
C. Large Oil and Steam	Blend → steam boiler → cannery steam Blend → village buildings, homes for heat		

[a] Electrical power requirements are rounded for ease of equipment economic estimations.
[b] Clinic, tribal council building, Native corporation office only; small outdoor wood furnaces would be required for the school and grocery store because of their location.

Should electrical power be provided for daytime cannery operations, a rating of 600 kW is needed. To supply electrical power for both heat and electrical needs to the entire village, a system capable of meeting a 2000-MW demand would be required. The energy loads required by each scenario presented are therefore technically feasibility for commercially available systems and the biomass feedstocks proposed, discussed further in the following sections.

Port Graham Resources

A sufficient quantity of solid biomass is available in the forested region surrounding Port Graham to supply energy to the village; liquid biomass (salmon oil) availability will depend on annual fishing yield and cannery waste production. Up to 5000 tons of wood annually (12% moisture, 7200 Btu/lb wet) could be harvested from the neighboring forests. Fish oil (124,000 Btu/gal) could also be used as a source of fuel for the village, especially if garnered from fish wastes produced during cannery processing. Details of the resource analysis are described in this section.

Over 500,000 tons of biomass could be accessible from Port Graham forested lands with half the availability located within ¼-mile of the existing roadway. Table 5 summarizes the wood resource potential. Wood moisture for the region is 39% "green" and 12% seasoned. Therefore, assuming 8100 Btu/lb dry for Sitka spruce (Department of Agriculture Forest Service, 1979), the heating value of this biomass source is estimated to be 7200 Btu/lb seasoned. Forested acres for both Native Allotment lands and Port Graham Corporation lands were quantified by Chugachmiut. The analysis considered lands with less than a 35% slope, outside of water buffers, readily lending themselves to road access construction, and suitable for long-term forest land management. Native Allotment lands that have not been the subject of previous forest management activities and the existing roadways will require a moderate-to-high maintenance upgrade to be serviceable. Therefore, the resource available within ¼-mile of an existing roadway was considered. It was estimated that about 250,000 tons of timber could be accessible from the existing roadways on Port Graham lands. This amount equates to approximately 5000 tons per year of wood availability on a 50-year rotation. This amount is sufficient for all wood heating and power systems studied.

Table 5. Timber Resource for Potential Fuel Utilization

Ownership	Total Resource Availability			Within ¼-mi. Existing Roadway		
	Acres	Tons/ Acre	Tons	Acres	% total	Tons
Native Allotment	6700	20	134,000	1160	17%	23,200
Corporate	15,700	25	393,000	12,700	81%	228,000
Forested	5400	60	324,000	2700	50%	162,000
1960–1980[a]	5700	10	57,000	5400	95%	54,000
1980–1995[a]	1900	5	9500	1900	100%	9500
1995–2000[b]	2700	1	2700	2700	100%	2700
Total	**22,400**	**24**	**527,000**	**13,900**	**62%**	**251,000**

[a] Previously harvested, assume a forest stand improvement scheme of thinning.
[b] Previously harvested, roadside and landing residue utilization.

Up to 630 tons salmon or waste fish would be required annually to supply heat to the village. The heating value of salmon oil is estimated at about 124,000 Btu/gal (Chioua, et al., 2006) or 96% of the energy of diesel on a volume basis. Fish availability will depend on annual fishing ability and cannery waste production. Salmon is a significant component of subsistence activities in Port Graham, and a use for wastes generated, e.g., from cannery operations, that would support village subsistence is desired.

Energy Technologies and Equipment

Biomass technologies, such as feedstock preparation, combustion, gasification, and utilization of a biomass fuel in existing equipment, are technically viable options for alternative energy in Port Graham. The layout of systems is bound by the energy system footprint required and the proximity needed to be maintained for safety measures and economics for distribution of energy. Feedstock preparation methods include production of logs, wood chips, and wood pellets; fish oil procurement and processing; and biomass storage requirements. Combustion systems suitable for the village include indoor wood boilers, outdoor wood furnaces, and full-scale combustion systems, which generate hot water for building heating. A gasification system is capable of providing a synthetic gas product or syngas which can be used to produce steam for heat or processing, combusted for building heat (forced air or hot water), fed to a turbine for electricity generation, or a combination for cogeneration. Fish oil can be used without further processing in a 50% diesel blend in the existing energy system. For all biomass technologies, the current systems can remain in place as a backup.

The layout of village structures is suitable for all scenarios proposed, from individual systems to larger, shared heating or cogeneration systems. Two examples are provided in Appendix C. The first shows outdoor wood furnaces serving multiple homes and village buildings. The second shows distributive heat, electricity, or cogeneration to the entire village using a large combustion or gasification system. Outdoor wood furnaces must be located about 100 ft away from both the property line of the unit served and any structures for safety measures. Large-scale systems serving the whole village require the installation of a piping network to provide heat to village buildings. Electricity produced via gasification can be distributed by connecting to the existing power plant for access to village power lines. Thus proximity to other structures, connections to structures for shared systems, and existing infrastructure determine the applicability of scenarios to the Port Graham village.

Feedstock Preparation Technology

Alternative fuels require new infrastructure, such as densification and fish oil-processing equipment. Table 6 provides a summary of feedstock options for each technology studied. Timber preparation, such as splitting, chipping, and/or pelletizing, may be needed depending on the technology implemented. Wood storage should be designed to allow the wood to dry sufficiently (12% moisture) for use in a combustion or gasification system and be sized to compensate for annual fluctuations in average winter temperatures. Fish wastes must be collected and processed to extract the oil for utilization in the existing technology. A description of feedstock processing follows.

Table 6. Feedstock Options for Presented Scenario Systems

Energy Systems		Feedstock Options
Wood Combustion Systems	A. Wood furnaces/boilers	Logs, wood chips, or pellets
	B. Automated combustion system	Wood chips
Wood Gasification Systems		Wood chips
Fish Oil Systems (i.e., existing diesel systems)		Fish oil–diesel blend, up to 50%

Logs, wood chips, and pellets can be produced from the harvest wood resource and densification equipment (e.g., grinder, pellet mill) for use as feedstock in biomass technologies, each offering increased efficiency and requiring additional processing. Logs may be produced in the forest and transported to the village or cut and split when in the village using a chainsaw. Small or split logs, having no bigger than a 15 in. combined diameter and length of 20–50 in. may be produced and used for indoor and outdoor wood furnaces, depending on furnace size.

The wood may also be densified into chips or pellets, providing the opportunity for feed automation in some systems. Wood chips as a feedstock are applicable to indoor and outdoor furnaces, burning more efficiently than logs, and are necessary for automation in full-scale wood combustion and gasification systems. Wood chips also burn more efficiently than logs, adding about 5% to log burn efficiency. Several types of grinders are available, including portable diesel and stationary electric grinders. Figure 4 shows a grinder chipping municipal wood waste. Alternatively, wood pellets provide the opportunity for automation in indoor and outdoor furnaces, as well as high energy density (7700 Btu/lb, 25% moisture) and efficiency (+10% log efficiency). Pellet production requires further grinding the wood chips into sawdust, drying, die casing to form the pellets, drying again, and cooling. Figure 5 shows an example of the process.

Wood storage for the community should hold sufficient material to supply energy needs projected from historical and current usage for 2 years and 30% more than the average need. This will allow the feedstock 1 year to dry to achieve the seasoned moisture rating of about 12% for Sitka spruce in the Kenai Peninsula. Green wood is typically 40% or greater, which is too wet for efficient combustion or gasification, generating a smoky exhaust and reduced heat production. The design should consider the potential for colder than average temperatures during winter months. Storage size about 30% above the average estimated feedstock requirement is recommended. Village wood distribution or delivery should also be coordinated, especially for scenarios suggesting individual wood heating systems.

Fish oil extracted from whole fish or wastes can be used as a straight blend with diesel or it can be converted to a methyl ester, i.e., biodiesel for use in existing energy equipment. Many

Figure 4. Wood chip production using a portable diesel grinder.

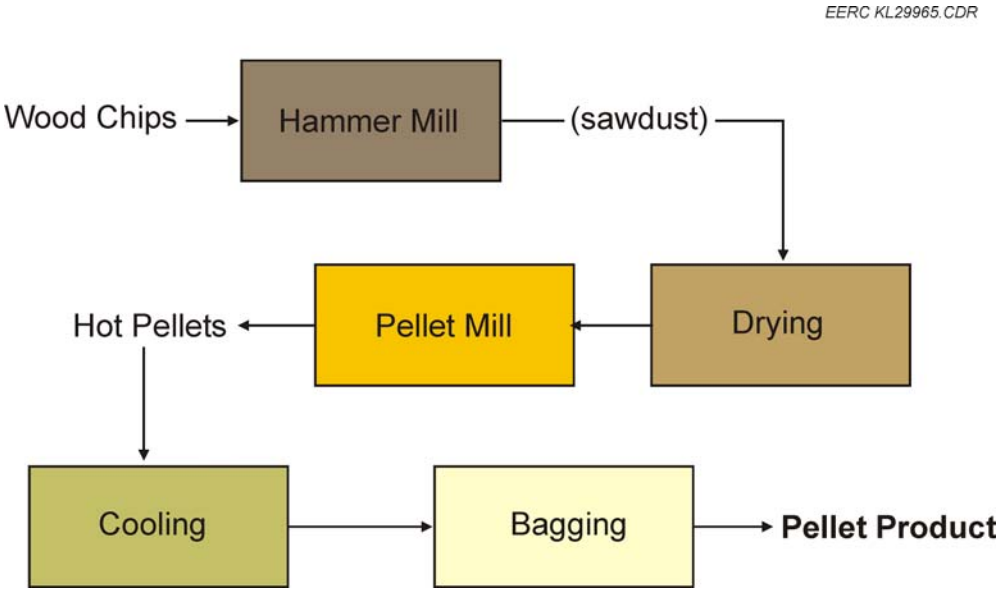

Figure 5. Example of wood pellet process.

companies generating fish oil (e.g., Unalaska, Unisea, and U.S. Seafood) are using it straight to supplement diesel fuel (B. Steigers, 2006). The Alaska Energy Authority (AEA) is demonstrating a portable fish oil production facility, capable of processing up to 50 tons (~13,000 gallons) of waste fish per day (J. Steigers, 2006). The biodiesel process reacts methanol to a triglyceride source, such as vegetable or fish oil, in the presence of a catalyst to produce a methyl ester and the by-product glycerin. Biodiesel is not currently produced in Alaska, requiring processing at a Hawaii facility for the Alaska Biodiesel Project, which is a demonstration of fish oil biodiesel utilization. Production of biodiesel in Port Graham would require importation of the catalyst and methanol.

Combustion Energy Systems

Wood combustion is a well-known technology with many commercial systems available in a wide range of sizes for either indoor or outdoor use. Combustion systems typically produce hot water for heat or steam for processing applications. The various options studied for Port Graham are described below, including an overview of combustion system equipment.

Combustion technologies considered included indoor wood boilers, outdoor wood furnaces, and full-scale systems. Combustion facilities can range in efficiency from 45%–75%, depending on feedstock and system type. Indoor wood boilers and outdoor wood furnaces offer the convenience of individual heating for village homes and buildings and low technical complexity. Indoor wood boilers require manual wood loading and ash removal. Indoor wood boilers are typically 70%–75% efficient. Outdoor wood heating systems can be automated or manual. These systems are the least efficient, 45%–55%. These units can be used individually or connected to multiple homes or buildings for short-distance distributive heating. Full-scale combustion systems can be designed large enough to provide heat for the entire village, condensing operation to one unit. Feed and ash removal of these systems are fully automated. Efficiency is about 75%–80%. Enclosures will be needed for these systems for equipment protection from the elements. Additional considerations for the implementation of combustion systems may include wood storage, hot water piping, and heat exchangers for homes/buildings currently heated by forced air. Table 7 and Figures 6–10 show selected examples of wood heating systems. A comprehensive list of vendors is provided in Appendix D.

Wood heating systems generally consist of three main components: fuel handling, boiler (a.k.a. combustion), and controls. The fuel-handling component contains the wood storage bin. If the system is automated, augers and conveyers are included to feed the wood to the boiler. The boiler contains the combustion chamber for conversion of the wood to energy for heating water in hot-water-heated buildings. Controls within the system will vary depending on the degree of automation. They can be limited to burn rate or include motors for augers and conveyors. Appendix D also contains detailed descriptions of the systems described and engineering designs.

Table 7. Examples of Combustion Systems

System Type	Manufacturer	Wood Feedstocks	Size Range, MMBtu/hr	Description
Indoor Wood Boiler	Alternate Heating Systems, Inc.	Logs, sawdust, shavings, and wood chips	0.1–1.0	For use with an existing boiler system, only the firebox is supplied, all operations are manual, cyclone separator for fly ash removal, automatic fuel delivery systems for densified biomass.
	Kerr Heating Products	Logs	0.7–0.14	For use with an existing boiler system, only the firebox is supplied, all operations are manual.
	Royall Manufacturing, Inc.	Logs, chips, pellets	0.13–0.25	
	Greenwood Technologies	Logs	0.2–0.3	
Outdoor Wood Furnace	The Wood Doctor	Logs, chips	0.1–1.3	
	Pro-Fab Industries	Chips, pellets	0.75–2.5	Hot water boiler, automatically feed fuel and remove ash, computerized control system manages all functions of the drive motors.
Full-Scale Combustion	Messersmith Manufacturing, Inc.	Chips, saw dust, and wood shavings	1.0–20	Fully automated Fuel-handling: traveling auger, storage bin, belt conveyors, and metering bin System: boiler, grates, air blowers Control: motors for augers, conveyors, blower, control panel containing programmable logic controllers, sensors, switches, and connecting cables.
	Chiptec Wood Energy Systems	Chips, sawdust, shavings, moisture content (6%–60%)	0.4–50	Automation for material handling including moving-wedge systems, traveling screw unloading systems, silos and silo-unloading systems, and belt and screw conveyors.
	Hurst Boiler & Welding Co., Inc.	Chips, bark, sawdust, shavings	2–60	Fuel conveyors, forced-draft fans and air systems, ash-handling conveyors, induced-draft fans and air systems, automated control systems, fuel-metering systems, ash reinjection systems, exhaust breeching and stacks, emissions control and monitoring, fire doors and grates, and sootblower systems.

Figure 6. Greenwood indoor wood boiler.

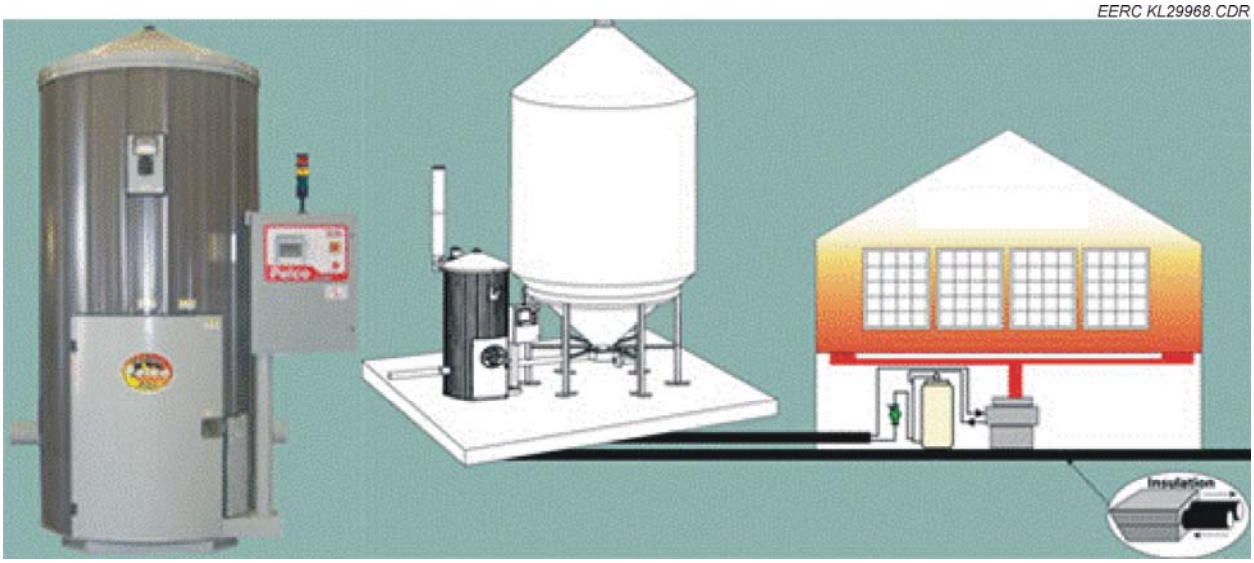

Figure 7. Pro-Fab wood or pellet outdoor furnace.

Figure 8. Wood Doctor outdoor wood furnace.

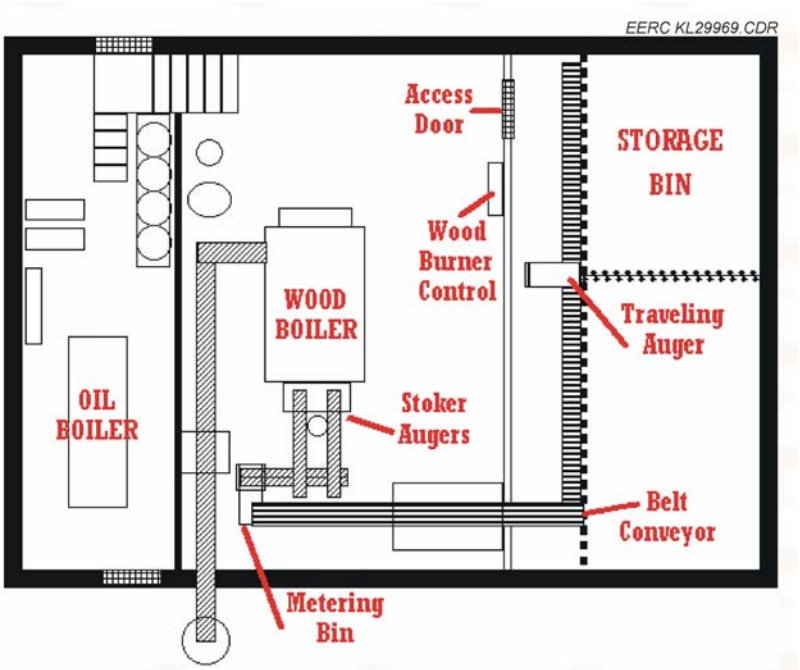

Figure 9. Example of typical system configuration; Messersmith wood combustion system.

Figure 10. Chiptec gasifier and boiler system.

Gasification Energy Systems

Gasification is a promising technology that converts solid fuel into a gas suitable for use with high-efficiency power equipment, steam generation equipment, or both for cogeneration. The following describes this technology and its potential applications for Port Graham.

During wood gasification, carbon monoxide and hydrogen are produced by direct heating in the gasification chamber allows a limited supply of air, pure oxygen, steam, or a combination to serve as a partial oxidizing agent for heat generation. When air is the oxidant, nitrogen accounts for about half of the product gas. This dilutes the concentration of hydrogen and carbon monoxide gases, resulting in a low-energy syngas with a heating value 130 Btu/scf on average. About 80% efficiency in syngas production and 17% efficiency in electricity generation can be achieved on a heating-value basis when wood is used as the feedstock. Fuel storage would include either a post-and-frame building or silo-unloading system. Figure 11 shows a general layout and footprint for the wood chip gasification system developed by the EERC. The EERC-developed gasification system was examined as the only known moderate gasification system (50kW–5MW) available. The system is a downdraft biomass gasification technology, chosen for its ability to reduce the tar content of the product gas. Appendix D contains a detailed description of the EERC gasification system.

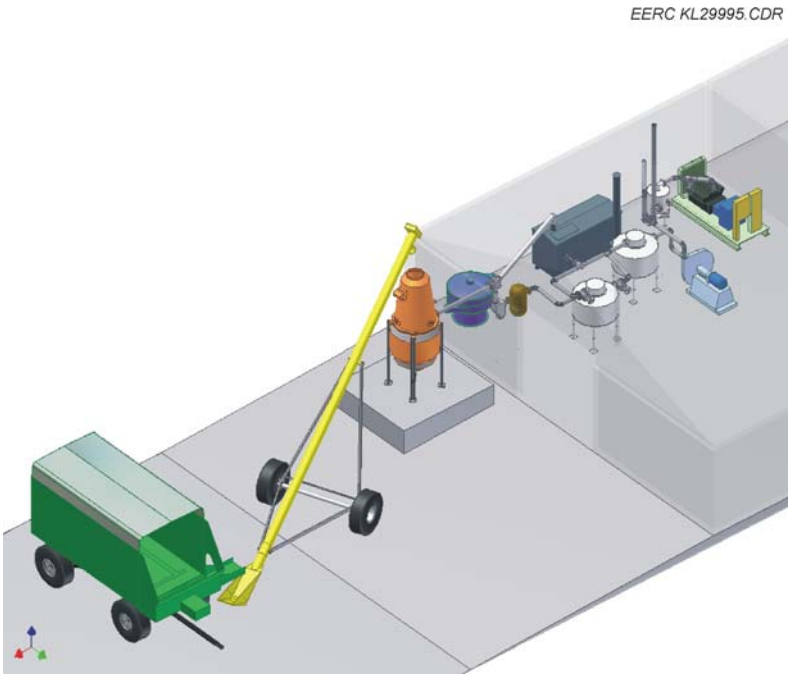

Figure 11. EERC-designed wood chip gasification system.

The low-Btu syngas can either be combusted for heat in village buildings, requiring installation of gas furnaces, or combusted in the existing fire-tube boiler for steam production, requiring installation of heat exchangers for hot-water and air heated buildings. The existing fire-tube steam boiler could conceivably be modified to use syngas from wood gasification. A microturbine or gas generator can produce electrical power from the syngas. A hurdle for electricity production may be negotiations with HEA. Considerations for implementation of gasification technology include wood storage and management of ash and waste water produced. Equipment specific to electricity generation includes connections to the existing power plant, phase downgrade[1] for homes and village buildings, and electric boilers/furnaces for homes and village buildings. Production of syngas or steam for distribution may require heat exchangers for homes/buildings currently heated by forced air, gas boilers/furnaces, and connections to the cannery for steam production. Refurbishing the fire-tube boiler and piping of the gas or steam produced would also be needed.

Utilization of Fish Oil Fuel in Existing Infrastructure

Utilization of fish oil in a diesel blend without conversion to biodiesel is a more viable option for the village of Port Graham. Straight fish oil can be used at a higher blend with diesel than biodiesel because of cold climate issues. Furthermore, fish oil does not require conversion

[1] If 3-phase power is produced by the biomass energy system for cannery operations, then the electrical power supply must be downgraded to single phase to be applicable for use in residences and community buildings.

to biodiesel for use in heating equipment, eliminating reliance on additional imports for processing.

Because of complex processing requirements and the expense of importing methanol and catalyst and limited diesel displacement, biodiesel production was not evaluated in this study. Biodiesel production requires a catalyst and methanol feedstock for conversion of the oil to a methyl ester. Replacing importation of diesel with importation of biodiesel feedstocks is counterproductive to the purpose of this study. In addition, quality and stability of the biodiesel product continue to be issues within the industry. Biodiesel also creates cause for concern because of clouding in cold climates. Gumming and clogging of the system can occur as the oil crystallizes in colder temperatures, restricting recommended use to no more than B5 (5% biodiesel, 95% diesel blend) (Houck, 2006; National Biodiesel Board, 2006). This limit would only displace about 4000 gallons diesel.

A fish oil–diesel blend containing up to 50% fish oil can be used in boilers and furnaces without further processing. The high cold-flow properties of the fish oil (cloud point about 0°C [Chioua, et al., 2006]) can also become problematic at higher blends during winter months. Blends containing more than 50% fish oil are not recommended (Hein, 2006). In addition, the fish oil blend should only be utilized in boilers or furnaces because of similar operational concerns. Equipment that would be required for implementation of a fish oil–fuel infrastructure includes refurbishing of the existing fire-tube boiler and possible installation of piping for distributive steam heating.

ECONOMICS

All biomass energy scenarios studied were determined to be economically viable, with the exception of those proposing distributive steam or syngas (alone, without cogeneration) and electricity generation for heat and power. Economic calculations are shown in Appendix E. Feedstock, capital, and operating costs were estimated for each scenario and the annual cost, savings, and payback were calculated for determination of the most economical approach for the village. Each scenario also requires an array of additional equipment for implementation, e.g. piping, as well as operating considerations such as wood loading and ash management, which can have a significant effect on economics. A detailed table listing the necessary requirements for scenario implementation is given in Appendix B. Emissions from operation of a biomass energy system are not expected to exceed national or state standards.

Feedstock Preparation Cost

Feedstock costs were based on wood procurement, estimated at $55/ton ($3.90/MMBtu) and ranging between $35,000 and $290,000 for wood scenarios and utilization of fish wastes, assumed to be available at no charge for generating fish oil. Forestry and fishery best management practices (BMPs) must be observed to maintain health and sustainability of the resource. An explanation of wood procurement follows.

Up to 5300 tons of wood chips and 42,000 gallons of fish oil would be required annually to implement the biomass energy scenarios investigated for a maximum feedstock expense of $290,000. A summary of feedstock costs and quantity estimated is provided in Table 8. Individual wood systems would consume an average of about 800 tons of logs annually at $42,000 per year. Moderate systems providing hot water or steam to only the cannery and village buildings would require the least amount of wood resource, about 400 tons of wood chips per year average for an annual cost of $22,000. About 900 tons of wood chips could provide distributive heat to the residential and commercial sectors, and steam to the cannery for an annual average cost of $52,000. Cogeneration systems require the largest wood resource for energy production, averaging 3400 tons of wood chips and $190,000 annually. Fish oil scenarios average 32,000 gallons annually to meet Port Graham energy needs, requiring about 500 tons of salmon or waste fish to be processed.

Table 9 shows the itemized cost estimation as it relates to the procurement of woody biomass from the forested lands in the vicinity of Port Graham, totaling $330 per metric board feet (MBF) or $55/ton wood. Numbers used in this estimation have been derived from historical

Table 8. Feedstock Cost for Each Energy Scenario*

Scenario	Annual Feedstock Requirement	Feedstock	Feedstock Cost
Indoor Wood Boilers	630	tons wood	$35,000
Small Outdoor Wood Furnaces	910	tons wood	$50,000
Moderate Outdoor Wood Furnaces	1100	tons wood	$62,000
Moderate Combustion System	420	tons wood	$23,000
Large-Scale Combustion System	850	tons wood	$47,000
Moderate Steam (gas)	400	tons wood	$22,000
Moderate Gas and Steam	390	tons wood	$21,000
Large Gas	850	tons wood	$47,000
Moderate Gas and/or Steam and Electricity	2900	tons wood	$160,000
Large Gas and Electricity	3300	tons wood	$180,000
High-Power Electricity and Heat	5300	tons wood	$290,000
High-Power Electricity	2900	tons wood	$160,000
Low-Power Electricity	2500	tons wood	$130,000
Moderate Steam and/or Oil	21,000	gal fish oil	$63,000
Large Oil and Steam	42,000	gal fish oil	$130,000

* Feedstock costs are based on wood procurement cost estimation of $55; additional cost for wood chip production is included in operational expenses. Fish oil volumes do not include diesel blend; it is assumed fish wastes at no charge are used to produce fish oil, and the cost of diesel in the blended fuel is the feedstock cost..

Table 9. Breakdown of Wood Procurement Costs

Cost Item	MBF	Tons
Market Value (base price paid to owner)	$53.00	$8.80
Harvest Cost	$280.00	$46.00
Logging and Overhead	$210.00	$35.00
Direct Logging Cost	$140.00	$23.00
Falling and Bucking (cutting)	$40.00	$6.60
Skidding (wood-to-road)	$38.00	$6.40
Sorting and Loading (grading)	$60.00	$10.00
Overhead Costs	$73.00	$12.00
General Burden	$31.00	$5.20
Mobilization (travel)	$28.00	$4.70
Camp (housing)	$14.00	$2.30
Transportation/Handling to Village	$23.00	$3.80
Development and Maintenance	$43.00	$7.10
Temporary Roads	$19.00	$3.10
Temporary Bulkhead (dock)	$9.40	$1.60
Erosion Control	$5.70	$0.95
Road Maintenance	$5.40	$0.90
Slash Disposal (limbs)	$3.30	$0.55
Total Wood Cost	**$330.00**	**$55.00**

sources relating to past timber harvests performed in this locale and combined with currently available commercial market pricing. The cost presented in Table 9 could vary substantially depending on landowner preferences. The market value estimation relates to the monetary compensation to the timber owner for the sale of biomass and may vary with changes in the market value of the wood harvested and contract negotiations among landowners. Harvest costs depend on harvest location, harvest intensity, and operator availability. The location of the biomass within the vicinity dictates not only the transportation distance, but the degree to which new roadway infrastructure would be needed to support operations. Harvest intensity is a variable of the volume of biomass extracted from a unit area and will be primarily controlled by the landowner. Clear cutting a unit area will overall yield substantially more biomass per the investment dollar than a selective thinning prescription; however, the landowner may prefer the more aesthetically pleasing selective thinning approach. The scale of economy will dictate the operator availability. Depending on the annual biomass requirements, the operator could range from a small local program to a larger commercial timber harvest operator.

Capital Investment

Estimated capital expenses range $260,000–$2.1 million for indoor or outdoor wood furnace purchase and delivery costs, wood combustion or gasification system delivery and installation, or installation of fish oil-processing equipment. Feedstock preparation, such as a grinder, pellet mill, or fish oil-processing unit, can add up to $700,000 to capital costs. Additional costs may include piping for distribution to individual homes and buildings when considering larger systems, refurbishing the existing fire-tube boiler for potential steam

production, or heat exchangers or gas/electric furnaces if producing steam, gas, or electricity for distribution, more than doubling equipment costs. The capital investment for implementation of a fish oil–fuel blend only requires the processing unit; however, additional costs such as piping and refurbishing will still apply.

Equipment for feedstock preparation can range from $250,000 to $450,000, with utilization of logs for indoor wood boilers and small outdoor wood furnaces, and wood chips for the remaining wood energy systems, as the most economical approach to wood feedstock choices. In an effort to be conservative, feedstock preparation equipment was sized to handle the maximum of 5300 tons of wood chips and 42,000 gallons of fish oil required annually for the scenarios studied. Several companies providing grinders were contacted for wood chipping, and it was identified that stationary electric grinders are the most economical. A comparison of the grinders and the quotes garnered are given in Appendix E. A 550-hp (410 kW) stationary electric grinder which produces chips at a rate of 12 tons/hr has an estimated delivery price of $250,000. Production of pellets requires the most complex processing, adding about $450,000 in equipment capital for a product rate of 4 tons/hr (Villarreal, 2006). This estimate includes the hammer mill, pellet mill, and drying and cooling components of the system. Because the hammer mill requires wood to first be chipped, the addition to the scenario capital is an estimated $700,000 for both a grinder and pellet mill. Therefore, production of pellets is not an economical feedstock for biomass energy in Port Graham. The capital investment for the AEA fish oil-processing equipment is estimated to be $250,000. Choices in fish oil fuel are limited to the diesel blend level, a decision based on supply, operability of equipment, and maximum diesel displacement. Calculations can be found in Appendix E.

Table 10 summarizes the combustion systems and respective capital cost estimations, ranging from $3500 to $400,000 for each scenario. Indoor wood boilers can be installed for the smallest capital investment, up to $7400. Outdoor wood furnaces are more expensive with capital costs averaging up to $12,000 for a system serving three community buildings. Full-scale combustion systems are the most expensive because of a more complex system and additional amenities, such as automation for feed and ash removal, building, etc. Quotes were garnered from a variety of vendors for the various sizes of indoor wood boilers, outdoor wood furnaces, and full-scale combustion systems recommended for the scenarios discussed. The capital estimation for each system represents the average of the quotes received.

The estimated capital investment for gasification systems varies from $500,000 to $2 million. Table 11 shows the estimation specific to each scenario. Gasification scenarios would require systems capable of 5 MMBtu/hr up to 2000 kW. EERC experience has shown that gasification systems of this magnitude can be installed for about $1500/kW. Industry average is approximately $1900/kW (Bailey, 2007; Pawlowski, 2007). A pricing range $1000–$2000/kW was used to account for economies of scale.

Additional capital costs can include piping, heat exchangers refurbishing the existing fire-tube steam boiler, and gas or electric boilers. Hot water, syngas, or steam piping would be required for the full-scale combustion and gasification systems. Installed costs for hot water and gas piping are about $3100 per 100 ft (Hoime, 2007; McCollah, 2007). Steam piping requires

Table 10. Estimated Capital Investment for Indoor and Outdoor Wood Heating Systems

<table>
<tr><th>Structure</th><th>Indoor Wood Boilers</th><th>Small Outdoor Wood Furnaces</th><th>Moderate Outdoor Wood Furnaces</th><th>Moderate Combustion System</th><th>Large Combustion System</th></tr>
<tr><td>Average Home[a]</td><td>$3500</td><td>$4900</td><td>$8100</td><td rowspan="2">–</td><td rowspan="9">$400,000</td></tr>
<tr><td>Residential Total</td><td>$250,000</td><td>$340,000</td><td>$160,000</td></tr>
<tr><td>School[b]</td><td>$7400</td><td>$11,000</td><td>$11,000</td><td rowspan="7">$350,000</td></tr>
<tr><td>Clinic</td><td>$5700</td><td>$8600</td><td rowspan="3">$12,000</td></tr>
<tr><td>Tribal Council Building</td><td>$5500</td><td>$8200</td></tr>
<tr><td>Native Corporation Office</td><td>$4100</td><td>$5900</td></tr>
<tr><td>Grocery Store[b]</td><td>$5100</td><td>$7400</td><td>$7400</td></tr>
<tr><td>Cannery</td><td>–</td><td>–</td><td>$210,000</td></tr>
<tr><td>Other[c]</td><td>–</td><td>$230,000</td><td>$480,000</td><td>$270,000</td><td>$640,000</td></tr>
<tr><td>Scenario Total</td><td>$270,000</td><td>$620,000</td><td>$630,000</td><td>$620,000</td><td>$1,000,000</td></tr>
</table>

[a] Capital for moderate outdoor wood furnace estimation is for one unit, serving 3-4 homes.
[b] Uses small outdoor wood furnace capital for moderate outdoor wood furnace scenario because of location.
[c] Additional capital requirements, such as piping and grinder capital.

Table 11. Estimated Capital Investment for Gasification Systems of Various Scenarios Studied

Scenario	Capital	Other*	Total
Moderate Steam	$500,000	$600,000	$1,100,000
Moderate Gas and Steam	$500,000	$300,000	$800,000
Large Gas	$540,000	$760,000	$1,300,000
Moderate Steam and Electricity	$830,000	$60,000	$1,400,000
Moderate Gas, Steam, and Electricity	$830,000	$300,000	$1,100,000
Large Gas and Electricity	$870,000	$760,000	$1,600,000
High-Power Electricity and Heat	$2,000,000	$320,000	$2,300,000
High-Power Electricity	$870,000	$250,000	$1,100,000
Low-Power Electricity	$540,000	$250,000	$790,000

*Additional capital requirements, such as piping and grinder capital.

insulation and pressure testing, costing about $46,000 per 100 ft installed (Hoime, 2007; McCollah, 2007). Heat exchangers, estimated to cost about $1000 per 1000 sq ft of heating space, would be needed for all scenarios studied for structures currently heated by forced air. The existing fire-tube steam boiler has not been in operation for more than 2 years and would require the tubes be brushed and pressure tested before operating. Refurbishing costs are estimated at $10,000. Gas or electric boilers or furnaces would be needed for gasification scenarios producing syngas or electricity for heat, ranging $750–$9300 for homes and village buildings (Table 12).

Table 12. Estimated Costs of Gas and Electric Boilers or Furnaces Used for Gasification Scenario Capital Investment Calculations

Structure	Gas	Electric
Average Home	$1,200	$750
School	$9,300	$6,000
Clinic	$4,700	$3,000
Tribal Council Building	$4,200	$2,700
Native Corporation Office	$1,900	$1,200
Grocery Store	$3,300	$2,100

Operating Expenses

Estimated operational costs range $1800–$59,000 annually, shown in Table 13. Costs include wood and fish oil preparation system utility needs and labor required for system operation, fuel feed for furnaces not automated, ash removal and disposal, and operators for combustion and gasification systems. Ash handling will also depend on automation; manual systems may require daily ash removal, while automated systems will remove the ash periodically and require weekly cleaning. Description methods for calculating operational expenses follow.

Operating costs of wood densification average about $41/ton for wood chips and are dependent on the tonnage of wood processed and the utility processing requirements (Ruegemer, 2007; Gross, 2007; Clay, 2007). For generation of wood chips, 410 kW of power is required by the grinder. Other factors used in estimation were the 12-ton/hr grinding rate, the hours to chip the required tons of wood for the given scenario, and the charge for electricity consumption. For example, the maximum wood feedstock requirement is 5300 tons wood chips annually. At the processing rate of 12 tons/hr, it would take the grinder 445 hours of operation to produce 5300 tons wood chips. About 180,000 kWh would thus be consumed by the grinder, costing an estimated $34,000 annually from the industrial rates given in Table 2. Should wood pellets be considered, the 4-ton/hr system is estimated to consume $57 per ton in operating expenses (Mani, 2006) in addition to chipping operations for pellet production, requiring $330,000 annually to produce 5300 tons wood pellets.

Indoor boilers and outdoor furnaces require manual loading of wood into the system and for ash removal, adding $25–$34/ton wood consumed. Automation may be available with pellets or with an auger modification for chips. A charge was applied to compensate for the additional labor required to perform these tasks. The loading cost was estimated to be about $17 per ton. Ash removal varied with feedstock type because of improved efficiency with greater densification. Therefore, ash removal costs were estimated to be about $17, $13, and $8 per ton for logs, wood chips, and pellets, respectively. Full-scale combustion systems and gasification systems are completely automated. Although ash disposal is still required for these systems, the cost is minimal.

Table 13. Estimated Operating Costs for Port Graham Energy Scenarios*

Scenario	Annual Feedstock Requirement	Feedstock	Annual Operating Cost
Indoor Wood Boilers	630	tons logs	$21,000
Small Outdoor Wood Furnaces	910	tons logs	$30,000
Moderate Outdoor Wood Furnaces	1100	tons chips	$59,000
Moderate Combustion System	420	tons chips	$25,000
Large-Scale Combustion System	850	tons chips	$26,000
Moderate Steam (gas)	400	tons chips	$25,000
Moderate Gas and Steam	390	tons chips	$25,000
Large Gas	850	tons chips	$26,000
Moderate Gas and/or Steam and Electricity	2900	tons chips	$30,000
Large Gas and Electricity	3300	tons chips	$31,000
High-Power Electricity and Heat	5300	tons chips	$35,000
High-Power Electricity	2900	tons chips	$30,000
Low-Power Electricity	2500	tons chips	$29,000
Moderate Steam and/or Oil	21,000	gal fish oil	$1,800
Large Oil and Steam	42,000	gal fish oil	$1,800

* Costs include wood loading for indoor boilers and outdoor furnaces, ash removal for all wood systems, grinder operation for wood chip production, and utility costs for fish oil processing; although the cost of fish oil production is considerably lower then wood, only a maximum of 50% diesel may be displaced, significantly affecting potential savings.

The fish oil-processing facility would utilize 10% of the product fish oil for heating needs and require a 30-kW electrical load, costing about $1800 annually for electricity (J. Steigers, 2006). Operating costs for the fish oil-processing system were determined using a similar method as that for wood chip production. For implementation of the large fish oil system, about 42,000 gallons fish oil would be needed annually. The fish oil production system is capable of processing 50 tons fish oil per day or 2gal/hr. To produce 42,000 gallons of fish oil, 47,000 gallons must be generated to compensate for heating needs. Based on the processing rate of 2 gal/hr, it would take the system 84 hours of operation to produce 47,000 gallons fish oil. Therefore, about 2500 kWh would be consumed annually for fish oil processing, costing $1800 per year in operating expenses using HEA rates from Table 2.

Potential Savings and Payback

Savings to Port Graham for installation of a biomass energy system were estimated up to $80,000 annually with simple payback periods as low as two years for the large fish oil fuel application. Savings were calculated from the current energy expenses and the estimated capital,

operating, and feedstock costs. A simple payback for the capital investment was derived from the calculated savings. Calculations are shown in Table 14. Sensitivity analyses were also performed on wood feedstock costs, diesel price, and capital investment for the moderate outdoor wood furnace scenario.

Table 15 summarizes the economic analysis results in order of economic viability, showing the use of a fish oil–diesel blend for heat throughout the village to be the most economically feasible, followed closely by the implementation of individual indoor wood boilers. Savings and payback periods for all scenarios ranged from an incurred cost to $80,000 annually and 2–27 years, respectively. Potential savings for each scenario were estimated by subtracting the annual estimated heating cost from the current heating cost using diesel fuel. The heating cost was calculated by summing the amortized capital, feedstock costs, and operating costs. The

Table 14. Calculation of Estimated Annual Savings and Simple Payback

Scenario	Current Energy Costs	Total Capital	Amortized Capital	Annual Feedstock Cost[a]	Annual Operating Costs	Annual Biomass Energy Costs[b]	Annual Savings[c]	Simple Payback[d]
Indoor Wood Boilers	$159,000	$273,000	$27,000	$35,000	$21,000	$83,000	$76,000	2.7
Small Outdoor Wood Furnaces	$159,000	$617,000	$62,000	$50,000	$30,000	$142,000	$17,000	7.8
Moderate Outdoor Wood Furnaces	$234,000	$885,000	$67,000	$63,000	$59,000	$189,000	$45,000	7.9
Moderate Combustion System	$110,000	$622,000	$48,000	$23,000	$25,000	$96,000	$14,000	10.0
Large-Scale Combustion System	$234,000	$1,044,000	$90,000	$47,000	$26,000	$163,000	$71,000	6.5
Moderate Steam (gas)	$110,000	$1,102,000	$96,000	$22,000	$25,000	$143,000	($33,000)	17.5
Moderate Gas and Steam	$110,000	$805,000	$66,000	$21,000	$25,000	$112,000	($2000)	12.6
Large Gas	$117,000	$1,299,000	$116,000	$47,000	$26,000	$189,000	($72,000)	29.5
Moderate Steam and Electricity	$344,000	$1,427,000	$128,000	$158,000	$30,000	$316,000	$28,000	9.1
Moderate Gas, Steam and Electricity	$344,000	$1,130,000	$99,000	$158,000	$30,000	$287,000	$57,000	7.2
Large Gas and Electricity	$468,000	$1,629,000	$149,000	$182,000	$31,000	$362,000	$106,000	6.4
High-Power Electricity and Heat	$468,000	$2,318,000	$218,000	$293,000	$35,000	$546,000	($78,000)	16.6
High-Power Electricity	$309,000	$1,120,000	$98,000	$161,000	$30,000	$289,000	$20,000	9.5
Low-Power Electricity	$234,000	$790,000	$65,000	$135,000	$29,000	$229,000	$5000	11.3
Moderate Steam (oil)	$110,000	$602,000	$60,000	$63,000	$2000	$125,000	($15,000)	13.4
Moderate Oil and Steam	$110,000	$260,000	$26,000	$63,000	$2000	$91,000	$19,000	5.8
Large Oil and Steam	$234,000	$260,000	$26,000	$126,000	$2000	$154,000	$80,000	2.5

[a]Fish oil feedstock costs include diesel in blend.
[b]Sum of amortized capital, annual feedstock cost, and annual operating costs.
[c]Difference between current energy costs and annual biomass energy costs.
[d]Total Capital divided by (Current Energy Costs – [Annual Feedstock Cost + Annual Operating]).

Table 15. Economic Summary of Port Graham Energy Scenarios Studied (in order of economic viability)

Ranking	Scenario	Annual Feedstock Requirement		Total Capital	Annual Savings	Payback
1	Large oil and steam	42,000	gal fish oil	$260,000	$80,000	2.5
2	Indoor wood boilers	630	tons logs	$270,000	$76,000	2.7
3	Large gas and elect	3300	tons chips	$1,600,000	$106,000	6.4
4	Large-scale combustion system	850	tons chips	$1,000,000	$71,000	6.5
5	Moderate gas, steam and electricity	2900	tons chips	$1,130,000	$58,000	7.2
6	Moderate oil and steam	21,000	gal fish oil	$260,000	$19,000	5.8
7	Moderate outdoor wood furnaces	1100	tons chips	$880,000	$45,000	7.9
8	Moderate steam and electricity	2900	tons chips	$1,400,000	$28,000	9.1
9	Small outdoor wood furnaces	910	tons logs	$620,000	$17,000	7.8
10	High-power electricity	2900	tons chips	$1,120,000	$20,000	9.5
11	Moderate combustion system	420	tons chips	$620,000	$14,000	10
12	Low-power electricity	2500	tons chips	$790,000	$4,700	11
13	Moderate gas and steam	390	tons chips	$810,000	($2,200)	13
14	Moderate steam (oil)	21,000	gal fish oil	$600,000	($15,000)	13
15	Moderate steam (gas)	400	tons chips	$1,100,000	($33,000)	17
16	High-power electricity and heat	5300	tons chips	$2,300,000	($80,000)	17
17	Large gas	850	tons chips	$1,300,000	($72,000)	30

simple payback was also calculated by dividing the capital investment by the potential savings (without amortized capital). This provided two methods of evaluating each scenario. The scenarios were then ranked according to greatest savings potential and quickest return on investment.

A sensitivity analysis was conducted on the estimated annual savings and the simple payback of the large fish oil and outdoor wood scenarios to test the effect of several variables: fish oil–diesel blend, wood feedstock cost, diesel price, and capital investment. Each variable was tested for a potential range above and below the estimated or assumed baseline. The results were graphed (Figure 12) to compare the rate of change in the savings and payback as the variable was changed. Sensitivity to small deviations in the estimated or assumed capital cost, diesel price, feedstock cost, or diesel blend could significantly alter the actual savings and payback, greatly affecting the economics of the proposed project.

The price of diesel and fish oil–diesel blend, followed by capital investment and wood procurement, are the most sensitive factors to the estimated savings and payback for the large fish oil and indoor wood boiler scenarios. Diesel displacement is important to the economic feasibility of fish oil fuel, becoming unviable for blend containing less than 20% fish oil. Procurement of the wood resource could conceivably range $35–$75/ton. Savings and payback show a minor effect (up to ±15%) with change in wood cost. Scenario economics could vary up to three times the baseline for both scenarios with change in diesel price, tested for the range of

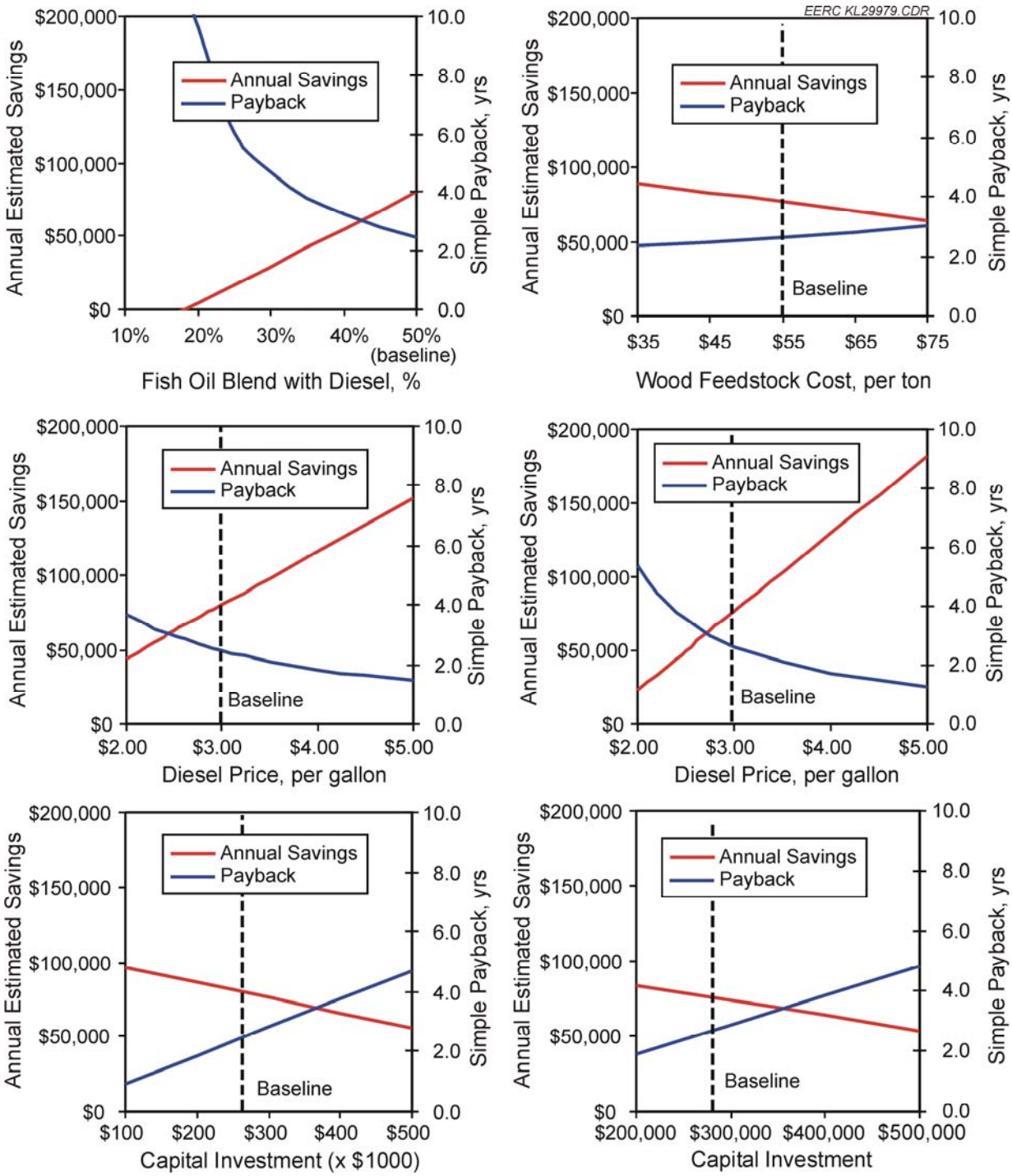

Figure 12. Sensitivity of estimated savings and payback for the large fish oil and the indoor wood boiler scenarios.

$2–$5/gal. The base diesel price of $3.00/gal is a conservative value, given the recent spikes in petroleum fuel costs. Although diesel price is historically volatile, the probability of a significant decrease in price is low. Figure 13 shows that the indoor wood boilers have the potential to generate greater savings than processing fish oil at higher diesel prices. Changes in estimated capital investment have a significant effect on savings and payback. Increasing the capital costs to $500,000 would generate an estimated savings of about $50,000 annually and a simple payback of 3 years, which would continue to be considered an economical investment.

Emissions

Compliance with emissions standards and permitting will not be limiting factors in the implementation of a biomass energy system in Port Graham. Emissions from biomass technologies chosen for this study can meet regulation limits by questioning manufacturers about compliance and through proper distance placement from structures. Although some testing may be required, current permitting is expected to be sufficient for implementation of a fish oil fuel blend.

Typical reduction of emissions by burning biomass oil compared to petroleum fuel should meet federal and state emission regulations. Therefore, standards were reviewed for wood systems. Until recently, there were no federal standards for stationary combustion engines or

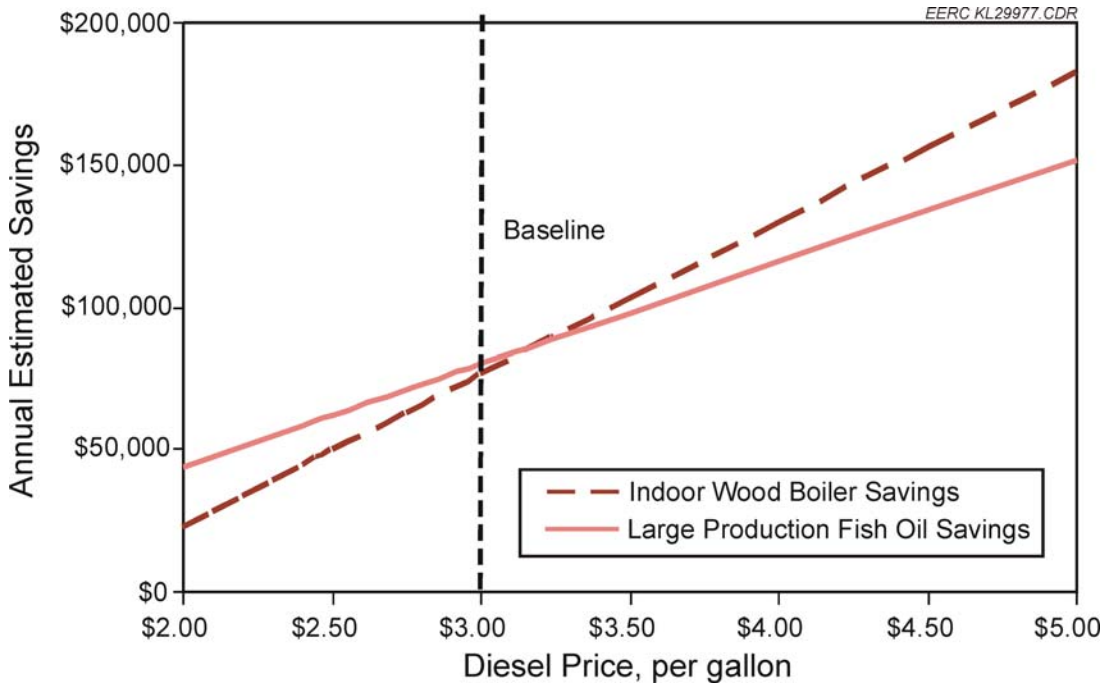

Figure 13. Comparative sensitivity of estimated savings for the large fish oil and the indoor wood boiler scenarios.

turbines. Manufacturers of outdoor wood furnaces currently have the option to participate in the U.S. Environmental Protection Agency (EPA) voluntary program. Requirements are for new models to emit no more than 0.6 lb particulate matter (PM) per million Btu of heat input (NESCAUM, 2007). This limit will be revised in 2010 to 0.32 lb PM per MMBtu. For example, outdoor wood furnaces that cannot meet the emissions limit of 0.32 lb particulates per MMBtu heat output must be located a distance of 500 ft from the served property line and any structures; current recommendations are 100 ft for units maintaining compliance. Alaska state standards simply regulate air quality and emissions. Air quality standards apply at the property boundary and emissions limits apply at the emitting source. Specific Alaska standards of interest include Air Quality Designations, Classifications, and Control Regions; Wood-Fired Heating Device Visible Emission Standards; and Ambient Air Quality Standards (Alaska Administrative Code, 2006). Specific regulation standards are given in Appendix F.

New permitting for implementation of a fish oil fuel is not anticipated because of utilization of the existing infrastructure. The state permit processing involves classification of the emitting source as a PSD (prevention of significant deterioration) or non-PSD (City & Borough of Juneau, 2001). A PSD source is considered a "major source," emitting ≥ 250 tons/yr of any single pollutant. Permitting requires extensive baseline monitoring, demonstration of compliance with air quality limits and best available control technology, and a detailed analysis of expected impacts and growth. Permitting a non-PSD source, as expected for the biomass systems considered, requires less rigorous monitoring but must still demonstrate compliance with emissions and ambient air quality standards.

DISCUSSION

Although most of the biomass energy scenarios presented are technically feasible and economically viable, issues of feedstock reliability and applicability and technology acceptance by the community should be addressed prior to implementation of any biomass energy system in Port Graham. It is important to select a resource that can reliably meet load requirements and an approach that has the greatest opportunity to impact current energy costs. Consideration was also given to the social viability of a biomass technology, such as feedstock delivery and system maintence.

Energy Load and Biomass Resources

Biomass energy requires a dependable resource and an efficient approach for economical implementation. The displacement of diesel used for heating will provide the greatest economic benefit to a biomass energy system. The ability to obtain biomass resources can be affected by environmental and market conditions, as well as by contract negotiations with landowners for wood procurement.

Utilization of biomass for heat offers the greatest opportunity for savings to the community of Port Graham. Although load requirements are divided evenly for the village between electricity and heating needs, the efficiency of biomass technology is greater for heat generation (45%–80%) than for electricity production (17%). Although electrical rates are higher than the

price of diesel, $35/MMBtu ($0.12/kWh) compared to $23/MMBtu ($3/gal), respectively, the difference does not make up for the efficiency. Therefore, displacing diesel used in heating applications should be the focus for substitution with a biomass fuel.

True availability of biomass resources will depend on land ownership and contracting agreements, as well as a consistent harvest of the required quantity for a biomass energy system. Native Allotment lands can have many owners, as the lands are passed down to family members through many generations. All owners would have to reach an agreement, making negotiations for harvesting wood on these lands potentially difficult. The issue with a fishery resource for energy has less to do with ownership and more to do with on consistency. Salmon yield and generation of fish wastes can easily vary from year to year, depending on many environmental factors or the market for canned salmon, respectively. Wood is considerably more reliable for use as a biomass energy resource.

Technology Issues

Feedstock efficiency and applicability, as well as system complexity and manual operation are the issues of greatest technical concern for the implementation of a biomass energy system in the remote village. Wood chips are the most applicable feedstock for biomass combustion and gasification systems, whereas a fish oil fuel can be utilized in existing boilers and furnaces. Simple, automated technologies are more desirable for the remote village.

Feedstock preparation or densification can have a significant effect on system efficiency and applicability to biomass technologies. Logs provide the least efficient burn and the most limited suitability to wood-fed technologies. Wood chips provide better burn efficiency and more consistency in quality and are applicable to all wood technologies discussed in this study. Automation is possible for a full-scale combustion and gasification system when using wood chips as a feedstock. Pellets offer the best burn efficiency and the most consistent quality and can be automatically fed to all technologies discussed. Pellet production requires the most processing and equipment. Consideration of this feedstock was limited to indoor boilers and outdoor wood furnaces for improved efficiency and automation opportunities. Fish oil is equally as efficient as diesel but utilization requires a slightly higher consumption rate to account for the 2% decrease in heating value when using a 50% fish oil–diesel blend.

The ability to maintain complex technologies is a concern for applicability to the tribal village because of its remote location. Maintenance and parts delivery are difficult to acquire in a timely manner. Although a large combustion or gasification system utilizes more complex technology, it would also provide the simplicity of a system designed for the entire community or several buildings. Gasification systems, in particular, offer a greater opportunity for subsistence living in Port Graham, supplying all of the village's heat and electrical needs. In contrast, having many individual systems also increases the potential for mechanical issues at any given time, although mechanical problems would only occur with one unit at a time as opposed to a system heating the entire community, such as a large combustion system. Individual or shared wood furnaces have the advantage of simplistic technology and little piping installation needed. The advantage of fish oil as fuel is the ability to retain the current energy infrastructure, adding only a processing unit. System maintenance concerns can be addressed by storing critical

parts, training a resident of Port Graham (or other community of close proximity, such as Nanwalek or Seldovia) for maintenance, and preserving the current energy infrastructure for use in the event of a breakdown.

The frigid conditions of an Alaskan winter should also be taken into account when considering manually operated technologies. Indoor wood boilers and outdoor wood furnaces involve manual operation of the system for feeding logs and ash removal. The outdoor conditions and labor requirements are of concern to Port Graham residents, especially for the elderly population. Full-scale combustion or gasification systems have automated feeding and ash removal at increased capital expense. Options to address this issue include creating a service or program to keep units operational or making automation a priority above economics.

Economic Observations

Distributive biomass energy for the whole village of Port Graham and biomass feedstocks requiring the least amount of processing or preparation provide the greatest opportunity for economic viability. Technology complexity and the extent of installed piping have the most affect on capital expenses. Reduction or elimination of manual labor and feedstock processing reduces annual operating costs. Although the large fish oil scenario was determined to be the most economically viable solution for Port Graham, implementation of the indoor wood boiler scenario offers stability of resource availability and procurement cost, as well as increased economy for the village.

Logs are the least expensive feedstock option for biomass technology, only requiring procurement expenses, followed by wood chips and fish oil. Pellets are the most expensive biomass feedstock, yet they have a higher heating value per ton because of the lower moisture content acquired from the densification process. The comparison of feedstock costs is summarized in Table 16. Averages are given for wood chips, pellets, and fish oil as costs will depend on the annual amount of feedstock generated for each scenario. The variance is an effect of the amortized capital cost for feedstock preparation equipment over the annual quantity processed. Figure 14 displays a graphical example of the cost ranges. Wood chip costs average about $96/ton for procurement and grinding, ranging $60–$125 per ton for all wood system scenarios. Pellet production costs average $230/ton for procurement, grinding, and milling, ranging $190–$260 per ton for indoor wood boiler and outdoor wood furnace applications. The

Table 16. Potential Feedstock Costs for Port Graham Resources*

Feedstock	Heating Value	Price/Cost	Per MMBtu
Diesel	130,000 Btu/gal	$3.00/gal	$23.00
Electricity	–	$0.12/kWh	$35.00
Wood, dry	8100 Btu/lb		
Logs, 12% moisture	7100 Btu/lb	$55/ton	$3.90
Chips, 12% moisture	7100 Btu/lb	$96/ton	$6.70
Pellets, 5% moisture	7700 Btu/lb	$230/ton	$15.00
Fish Oil	120,000 Btu/gal	$1.10/gal	$8.50

*Average values used where cost may vary depending on annual production.

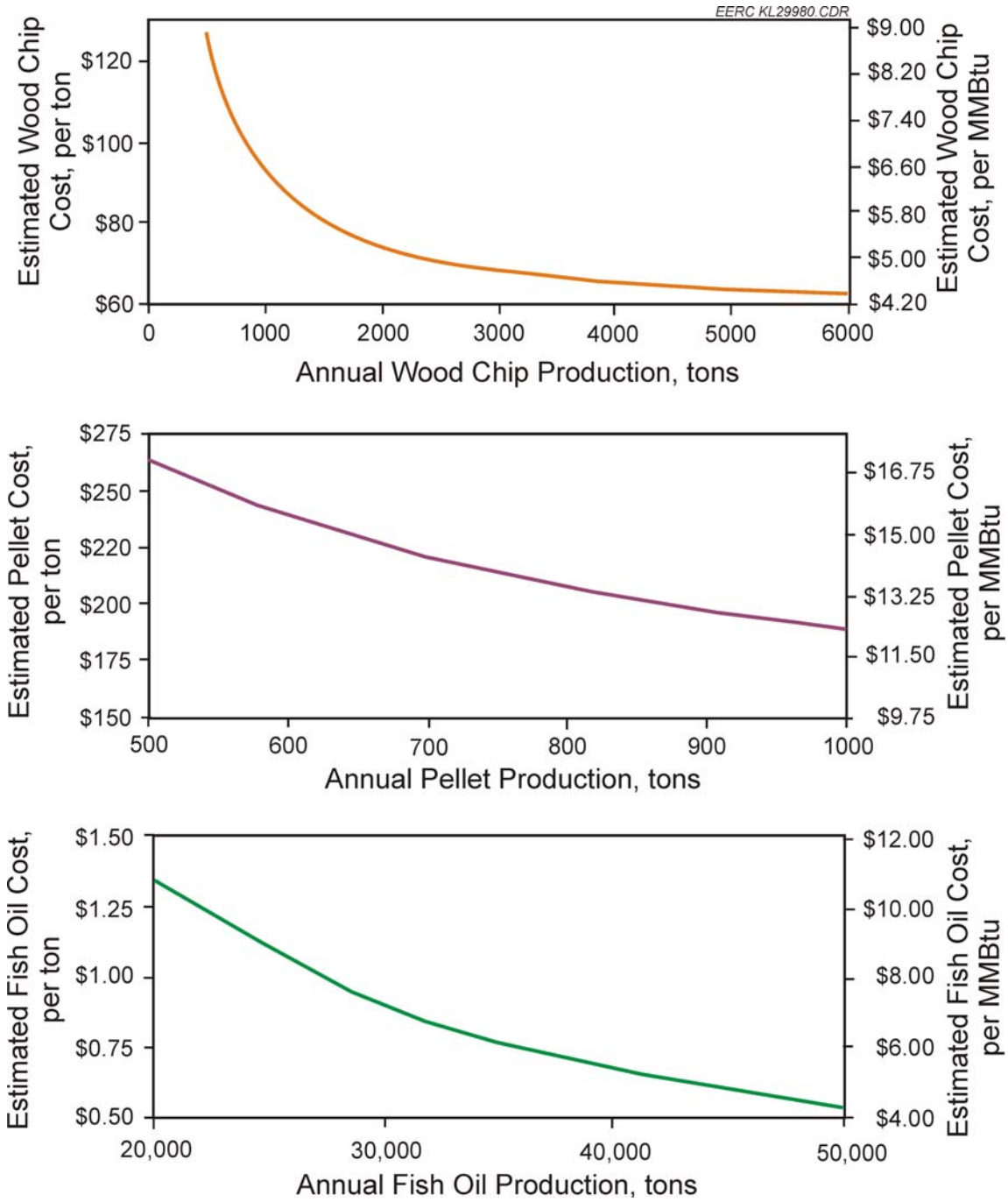

Figure 14. Variation in wood chip, pellet, and fish oil cost with respect to production.

unit cost of the fish oil feedstock will also vary depending on the amount of fish oil produced, averaging $1.10/gal and ranging $0.50–$1.30 per gallon. In addition, feedstock costs can vary with the market values of timber or fish oil, especially if sufficient wastes are not generated and the whole salmon is required.

The smallest capital investments (<$0.5 million) are estimated for the fish oil–diesel blend scenarios, as well as indoor wood boilers, because of low costs for combustion or processing equipment and no requirements for piping installation. Two significant patterns are apparent in the estimations of capital expenses showing gasification scenarios to propose large investments and fish oil and indoor wood boiler scenarios to suggest small investments. The largest capital investments (>$1 million) are required by gasification scenarios for moderate steam production, large syngas application, and electricity for power and heat. The high costs are derived from gasification equipment estimations for larger systems and/or piping installation for distributive heat.

Fish oil scenarios offer the lowest annual operating costs, incurring only utility expenses for fish oil processing. Little difference in operating costs exists between biomass energy scenarios with the exception of moderate outdoor wood furnaces and fish oil applications. The moderate outdoor wood scenario generates the highest operational expenses because it includes service to the cannery, requiring more feedstock than the small individual combustion systems. Therefore, the most manual labor is needed to feed the furnaces and remove ash. In addition, this scenario requires wood chips (because of improved economics over logs), which generate utility costs for processing.

The highest savings (>$50,000 annually) was estimated for scenarios proposing application of a biomass energy system for the village of Port Graham in its entirety and/or when biomass feedstocks require the least amount of processing. The larger-scale applications which serve the entire village generate more savings from greater displacement of diesel and electricity. These included large combustion system, fish oil, and syngas–electricity cogeneration scenarios. Estimated capital investments, greater than $1 million for the combustion and gasification system, create mediocre payback periods of 6–7 years. The fish oil and indoor wood boiler scenarios benefit from low-cost feedstock and no additional costs for feedstock preparation. A savings of $75,000–$80,000 per year is estimated, equivalent to 20% of the total village energy costs or up to 50% savings to the user for heat. Because both of these scenarios also have small estimated capital investments, payback periods are under 3 years. Scenarios which are expected to provide no economic benefit include those proposing distributive steam or syngas (alone, without cogeneration) and electricity generation for heat and power.

Differences in the implementation of the indoor wood boiler scenario (compared to utilization of a fish oil fuel) include enhanced economy, greater diesel displacement, and the potential for increased PM emissions. Positive aspects of fish oil production include the introduction of only one new system which a selected few must learn to operate. A fish oil–diesel blend would also be the easiest to implement, utilizing the current heating infrastructure and requiring little change in operation for community members. Wood boilers require manual operation of feed and ash removal. Because of the lower combustion efficiency of indoor wood boilers using logs, increased particulate emissions compared to a fuel oil are possible. However,

the availability of a wood resource would be more stable than a fish resource subject to annual variation in harvest. The cost of wood procurement will be contracted and therefore less subject to spikes in market value. Utilization of the wood resource in the forests surrounding the village provides a greater opportunity for economic growth within Port Graham. Finally, fish oil fuel will only displace up to half the diesel currently imported into Port Graham, compared to 70% diesel substitution by installing indoor wood boilers for heat. A summary is provided in Table 17.

CONCLUSIONS

Fish oil–diesel blended fuel and indoor wood boilers are the most economical options for implementation of biomass energy in the village of Port Graham, Alaska. A sufficient resource of biomass is available to Port Graham in the forest surrounding the village and from the established salmon industry. The small, remote area presents a unique opportunity for implementation of a biomass distributive energy system to reduce reliance on imported fuels.

The small energy load required by the village, 6 MMBtu/hr and 560 kW, is favorable for distributive energy technologies. A villagewide distributive energy system could provide the opportunity for heating village buildings and homes during the winter months and cannery operations during summer months. Individual structure applications are an equally suitable solution to meet Port Graham energy needs.

A sufficient quantity of wood for use as fuel is located in the forest region surrounding Port Graham, applicable to all biomass combustion and gasification technologies studied; salmon availability is dependant on cannery waste generation and annual fishery harvest. A maximum of 5000 tons per year, assuming a 50-year rotation, is available within the ¼-mile of existing timber roadways. Fish oil produced from wastes generated by the village cannery is also a potential energy source for the village. Up to 630 tons waste salmon or whole fish would be required

Table 17.Comparison of Large Fish Oil and Indoor Wood Boiler Scenarios

Scenario	Fish Oil Fuel	Indoor Wood Boilers
Advantages	• Installation of one system and process • Utilization of existing equipment and technology • No operational changes to fuel user	• Resource reliability and cost stability • Lower risk in event of one system breakdown • Opportunity for economic growth with development of feedstock infrastructure • Offers greater diesel displacement
Disadvantages	• Resource reliability and cost stability • Greater risk in event of one system breakdown	• Installation of many systems • New heating equipment and technology • Fuel user must manually attend boiler for feed and ash removal • Potential particulate emissions

annually to sustain a fish oil–diesel fuel application in Port Graham. Concerns with the use of salmon as an energy resource include quantity reliability and cost stability from environmental or market fluctuations.

The technical viability of a biomass energy system in Port Graham will depend primarily on inhabitants' confidence in the technology. Biomass technologies applicable for energy production or cogeneration in Port Graham include wood combustion and gasification, and utilization of existing equipment via a liquid biomass fuel. Concerns with implementation of a biomass energy system include manual operation for wood systems and the ability to handle equipment maintenance. Existing systems should remain to be used as backup in the event of an emergency.

The application of a fish oil–diesel blend to the entire village was determined to be the most economically feasible alternative energy option for Port Graham, followed by the installation of indoor wood boilers serving individual village buildings or homes. Fish oil-blended fuel costs are estimated to be $1.80/gal for a 50% blend. Application to the village as a whole would require approximately 42,000 gallons of fish oil or 630 tons of waste fish annually. About 630 tons of logs would be needed annually for the application of the indoor wood boiler scenario at $55/ton. Capital investments of about $265,000 are estimated for fish oil-processing equipment and the delivered and installed boilers. Calculated annual savings are about $80,000 for fish oil fuel and indoor wood boilers, saving the user up to 50% in heating expenses. The simple payback periods for capital recovery are 2–3 years. Issues with emissions from wood heating systems can be addressed by seeking out vendors that manufacture furnaces which show consistent compliance with the EPA voluntary program. Advantages to implementation of the indoor wood boiler scenario beyond economics include enhanced economy and greater diesel displacement.

NEXT STEPS

The following steps are recommended for implementation of a Port Graham biomass energy system:

- A formal engineering design and quote, including guarantee or proof of emissions compliance for wood systems
- Secured financing
- Equipment procurement and installation
- Personnel hire and training
- Coordination of feedstock storage and delivery, as well as blending for fish oil fuel
- Ash disposal plan for wood systems

Once the preferred energy scenario is chosen and an approach plan is derived by the village of Port Graham, a formal design and quote for the system should be acquired before purchase of equipment. Either a guarantee of meeting emissions standards or supportive emissions data showing consistent compliance should be requested and discussed when acquisitioning wood energy equipment. Delivery and installation should be included in any quote provided. Financing could be accomplished through energy performance contracting, future grants, or sources acceptable to Chugachmiut. Technology vendors typically supply training for future operations and maintenance of equipment acquired. The logistics of a delivery or pickup system for biomass fuel, fuel storage both at production and utilization sites, and possible handling of a continuous wood ash stream requires coordination and planning. The community of Port Graham must remain diligent in the execution of a biomass energy plan to reduce diesel imports and support subsistence.

REFERENCES

Note: All timber assessment and cost data for Port Graham was supplied by Chugachmiut foresters during the course of this project; references for capital costs of wood energy systems can be found in Appendix D.

Alaska Administrative Code, Title 18. Environmental Conservation, Chapter 50. Air Quality Control, June, 2006, www.touchngo.com/lglcntr/akstats/aac/title18/chapter050.htm (accessed October 2006).

Bailey, R. Sr. PRM Energy Systems, Inc. Personal communication, April 23, 2007.

Chioua, B.; El-Mashadb, H.; Avena-Bustillosa, R.; Dunnc, R.; Bechteld, P.; McHugha, T.; 2006.

City and Borough of Juneau. *Kensington Mine Project*; CBJ Community Development Department, Large Mine Permit MIN-M96-01, 2001, www.juneau.lib.ak.us/cdd/Kensington/airqual.htm (accessed October 2006).

Clay, T. West Salem Machinery/Gerlinger Carrier Co. Personal communication, April 5, 2007.

Dayton, D. *A Summary of NO_x Emissions Reduction from Biomass Cofiring*; National Renewable Energy Laboratory, NREL/TP-510-32260, May 2002.

Department of Agriculture Forest Service. *How To Estimate Recoverable Heat Energy in Wood or Bark Fuels;* Forest Products Laboratory, General Technical Report FPL 29, 1979, www.fpl.fs.fed.us/documnts/fplgtr/fplgtr29.pdf (accessed October 2006).

Energy Information Administration (EIA). *West Coast No. 2 Diesel Retail Sales by All Sellers*; U.S. Department of Energy, http://tonto.eia.doe.gov/dnav/pet/hist/ddr006A.htm (accessed February 2007).

Engström, F. *Overview of Power Generation from Biomass*; Foster Wheeler Development Corporation, 1999 Gasification Technology Conference, San Francisco, CA, Oct 19–20, 1999.

Fernando, R. *Fuels for Biomass Cofiring*; Clean Coal Centre, CCC/102, ISBN 92-9029-418-3, 37 pp, October 2005.

Gross, C. Bandit Industries, Inc. Personal communication, April 5, 2007.

Hein, T. Biofuel – a Fishy Business? *New Agriculturist*, 11-01-06, www.new-agri.co.uk/06-6/focuson/focuson2.html (accessed December 2006).

Hoime, R. Northwest Manufacturing, Inc. Personal communication, May 22, 2007.

Homer Electric Association, Inc. Current Electric Rates, www.homerelectric.com/About/Current%20Rates.htm (accessed January 2007).

Houck, J. Wilson Fuel Co. Limited. Personal communication, December 14, 2006.

Mani, S. Simulation of Biomass Pelleting Operation; Presented at University of British Columbia, Department of Chemical & Biological Engineering, Bioenergy Conference & Exhibition 2006, Prince George, May 31, 2006.

McCollah, D. The Wood Doctor (AK dealer). Personal communication, May 25, 2007.

National Biodiesel Board (NBB). Cold Flow Impacts, www.biodiesel.org/pdf_files/fuelfactsheets/Cold%20Flow.PDF (accessed December 2006).

(Northeast States for Coordinated Air Use Management) NESCAUM, Model Regulation for Outdoor Hydronic Heaters, January 29, 2007.

Pawlowski, Z. New Horizon Inc. Personal communication, May 6, 2007.

Ruegemer, T. Vermeer Manufacturing. Personal communication, April 20, 2007.

Steigers, B. Steigers Corp. Personal communication, December 14, 2006.

Steigers, J. Precision Energy Services. Personal communication, December 14, 2006.

U.S. Census Bureau, Geographic Area: Port Graham CDP, Alaska, Census 2000.

Villarreal, M. Warren & Baerg Manufacturing, Inc. Personal communication, October 2, 2006.

Zhangb, R. *Rheological and Thermal Properties of Salmon Processing Byproducts*; American Society of Agricultural and Biological Engineers, An ASABE Meeting Presentation, Paper Number: 066157, 2006,

http://asae.frymulti.com/request.asp?JID=5&AID=21520&CID=por2006&T=2 (accessed January 2007).

APPENDIX A

PORT GRAHAM SYSTEMS AND COMMUNITY PICTURES

EERC KL29991.CDR

EERC KL29900 CDR
Hatchery
2006/08/14 14:06
Cannery
Hatchery
Cannery
2006/08/14 14:30

EERC KL29987.CDR

EERC KL29986.CDR

EERC KL29989 CDR

EERC KL29990.CDR

APPENDIX B

DETAILED SCENARIOS AND REQUIREMENTS

Table B1. Potential Energy Scenario Descriptions for the Village of Port Graham

Scenario	Requirements
I. Wood Combustion	
A. Wood Furnaces/Boilers	
1. Indoor Wood Boilers	1. Indoor wood boilers for individual home and village building heat
2. Small Outdoor Wood Furnaces	2. Small outdoor wood furnaces for individual home and village building heat
3. Moderate Outdoor Wood Furnaces	3. Moderate outdoor wood furnaces for multiple (3–4) home and village building heat
B. Automated Combustion System	
1. Moderate Combustion System	1. Moderate combustion system for village building heat and cannery steam
2. Large-Scale Combustion System	2. Large-scale combustion system for entire village, i.e., home and village building heat and cannery steam
II. Wood Gasification System	
A. Gas Production	
1. Moderate Steam (gas)	1. Pipe gas to existing fire-tube steam boiler for cannery steam and steam heat for village buildings
2. Moderate Gas and Steam	2. Pipe gas to existing fire-tube steam boiler for cannery steam and pipe gas to village buildings for heat
3. Large Gas	3. Provide gas to entire village, i.e., home and village building heat and cannery steam
B. Gas and Electricity Production	
1. Moderate Steam and Electricity	1. Scenario II.A.1. and electricity supplied to entire village on existing lines (1-phase, 260 kW)
2. Moderate Gas, Steam, and Electricity	2. Scenario II.A.2. and electricity supplied to entire village on existing lines (1-phase, 260 kW)
3. Large Gas and Electricity	3. Scenario II.A.3. and electricity supplied to entire village on existing lines (1-phase, 260 kW)

Continued…

Table B1. Potential Energy Scenario Descriptions for the Village of Port Graham (continued)

Scenario	Requirements
II. Wood Gasification System [cont.]	
C. Electricity Production	
1. High-Power Electricity and Heat	1. Electricity for power and heat to entire village, 3-phase, 560 kW
2. High-Power Electricity	2. Electricity supplied to entire village on existing lines (3-phase, 560 kW)
3. Low-Power Electricity	3. Electricity supplied to entire village on existing lines (1-phase, 260 kW)
III. Fish Oil	
A. Moderate Steam (oil)	A. Use 50% fish oil–diesel blend in existing fire-tube boiler for cannery steam and steam heat for village buildings (can be used in conjunction with Scenarios I.A.1–3. and II.C.2–3.)
B. Moderate Oil and Steam	B. Use 50% fish oil–diesel blend in existing fire-tube boiler for cannery steam and use blend for heat in village buildings (can be used in conjunction with Scenarios I.A.1–3. and II.C.2–3.)
C. Large Oil and Steam	C. Use 50% fish oil–diesel blend in existing fire-tube boiler for cannery steam and use blend for heat in homes and village buildings (can be used in conjunction with Scenarios II.C.2–3.)

Table B2. Detailed Energy Scenarios and Requirements for the Village of Port Graham

Scenario	Requirements
I. Wood Combustion	
A. Wood Furnaces/Boilers	*Logs, Wood Chips, or Pellets*
1. Indoor wood boilers for individual home and village building heat	Wood delivery, indoor wood storage, individual loading (automation with pellets), and ash management
2. Small outdoor wood furnaces for individual home and village building heat	Wood delivery, storage, individual or service loading (automation with pellets or auger modification for chips), and ash management, *minimal* hot-water piping, heat exchangers for homes/buildings currently heated by forced air
3. Moderate outdoor wood furnaces for multiple (3–4) home and village building heat	Wood delivery, storage, service loading (automation with pellets or auger modification for chips), and ash management, *moderate* hot-water piping, heat exchangers for homes/buildings currently heated by forced air
B. Automated Combustion System	*Wood Chips*
1. Moderate combustion system for village building heat and cannery steam	Some supervision, ash management, *moderate* hot-water and steam piping, heat exchangers for buildings currently heated by forced air
2. Large-scale combustion system for entire village, i.e., homes and village building heat and cannery steam	Some supervision, ash management, *extensive* hot-water and steam piping, heat exchangers for homes/buildings currently heated by forced air
II. Wood Gasification System	
A. Gas Production	*Wood Chips*
1. Pipe gas to existing fire-tube steam boiler for cannery steam and steam heat for village buildings	Refurbish boiler, some supervision, ash and wastewater management, *minimal* gas piping, moderate steam piping, heat exchangers to convert steam to forced air or hot water heat
2. Pipe gas to existing fire-tube steam boiler for cannery steam and pipe gas to village buildings for heat	Refurbish boiler, some supervision, ash and wastewater management, *moderate* gas piping, gas boilers/furnaces for village buildings
3. Provide gas to entire village, i.e., home and village building heat and cannery steam	Refurbish boiler, some supervision, ash and wastewater management, *extensive* gas piping, gas boilers/furnaces for homes and village buildings
B. Gas and Electricity Production	*Wood Chips*
1. Scenario II.A.1. and electricity supplied to entire village on existing lines (1-phase, 260 kW)	Same as II.A.1. requirements, microturbine or gas generator, connections to existing power plant
2. Scenario II.A.2. and electricity supplied to entire village on existing lines (1-phase, 260 kW)	Same as II.A.2. requirements, microturbine or gas generator, connections to existing power plant
3. Scenario II.A.3. and electricity supplied to entire village on existing lines (1-phase, 260 kW)	Same as II.A.3. requirements, microturbine or gas generator, connections to existing power plant

Continued…

Table B2. Detailed Energy Scenarios and Requirements for the Village of Port Graham (continued)

Scenario	Requirements
II. Wood Gasification System [cont.]	
C. Electricity Production	*Wood Chips*
1. Electricity for power and heat to entire village, 3-phase, 560 kW	Microturbine or gas generator, connections to existing power plant, connection to cannery for steam production electric boilers/furnaces for homes and village buildings, phase downgrade for homes and village buildings
2. Electricity supplied to entire village on existing lines (3-phase, 560 kW)	Microturbine or gas generator, connections to existing power plant, phase downgrade for homes and village buildings, connection to cannery for steam production (assumes existing lines cannot carry voltage required for electric boilers/furnaces)
3. Electricity supplied to entire village on existing lines (1-phase, 260 kW)	Microturbine or gas generator, connections to existing power plant (only supplies night/downtime power to cannery), phase downgrade for homes and village buildings (assumes existing lines cannot carry voltage required for electric boilers/furnaces)
III. Fish Oil	
A. Use 50% fish oil–diesel blend in existing fire-tube boiler for cannery steam and steam heat for village buildings (can be used in conjunction with Scenarios I.A.1–3. and II.C.2–3.)	Fish oil-processing system, storage, some supervision, refurbish boiler, *moderate* steam piping
B. Use 50% fish oil–diesel blend in existing fire-tube boiler for cannery steam and use blend for heat in village buildings (can be used in conjunction with Scenarios I.A.1–3. and II.C.2–3.)	Fish oil-processing system, storage, some supervision, refurbish boiler, *minimal* steam piping, fuel delivery
C. Use 50% fish oil–diesel blend in existing fire-tube boiler for cannery steam and use blend for heat in homes and village buildings (can be used in conjunction with Scenarios II.C.2–3.)	Fish oil-processing system, storage, some supervision, refurbish boiler, *minimal* steam piping, fuel delivery

APPENDIX C

SCENARIO LAYOUTS

Figure C-1. Layout of gasification or full-scale combustion scenarios.

Figure C-2. Moderate outdoor wood furnace scenario layout.

APPENDIX D

VENDORS AND DESIGNS

COMBUSTION SYSTEMS

Several manufacturers and types of wood combustion systems were considered for applicability to Port Graham. These included such manufacturers as Greenwood Technologies; Royall Manufacturing, Inc.; Pro-Fab Industries, Inc.; The Wood Doctor; Messersmith Manufacturing, Inc.; Chiptec Wood Energy Systems; and Hurst Boiler & Welding Co., Inc. A description of systems researched from each manufacturer follows.

Wood heating systems generally consist of three main components: fuel handling, boiler (a.k.a. combustion), and controls. Figure D-1 illustrates a typical system and equipment. The fuel-handling component contains the wood storage bin. If the system is automated, augers and conveyers are included to feed the wood to the boiler. The boiler contains the combustion or gasification chamber for conversion of the wood to energy for heating water in hot-water-heated buildings. Controls within the system will vary depending on degree of automation. They can be limited to burn rate or include motors for augers and conveyors. Ash handling will also depend on automation. Manual systems may require daily ash removal, while automated systems will remove the ash periodically and require weekly cleaning.

Indoor wood boilers and outdoor wood furnaces are very similar, requiring connection to the existing heating system during installation and manual control of operations. Logs are the typical feedstock recommended for consistent combustion; however, some manufacturers offer

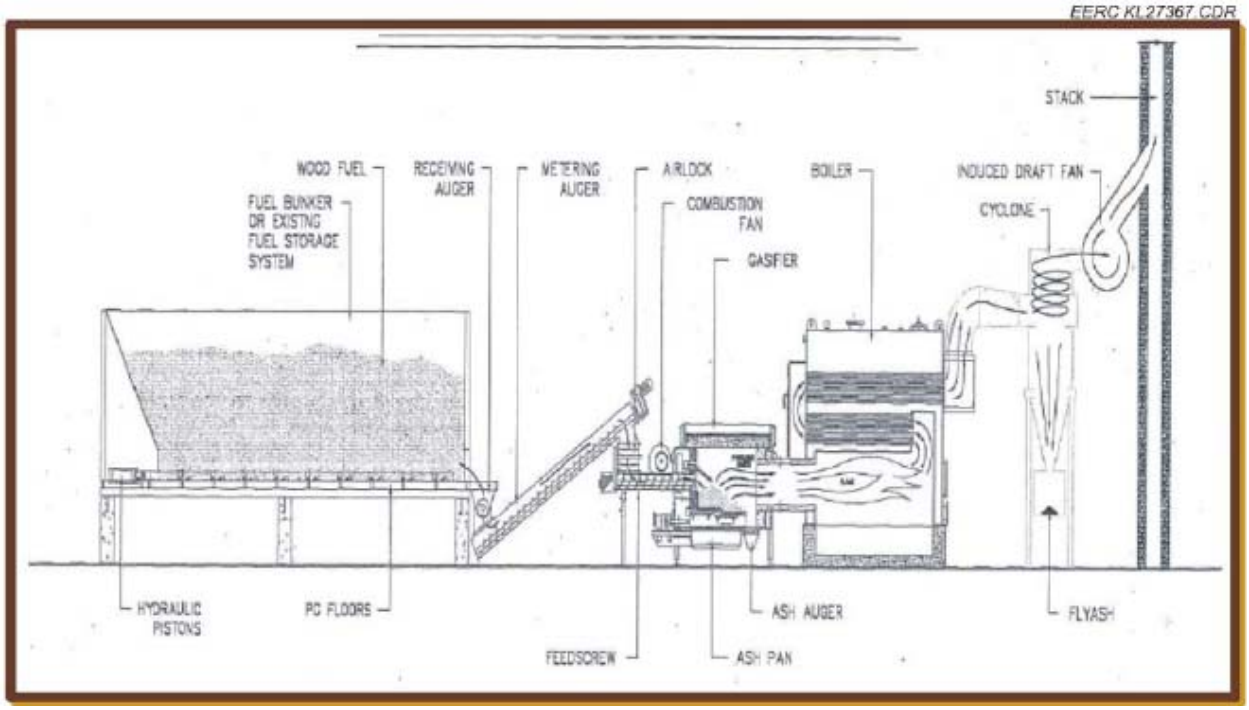

Figure D-1 The basic mechanics of a typical wood chip-burning biomass system (Linderman and Scheele, 2006).

automated fuel-handling systems for densified feedstocks such as wood chips, pellets, or sawdust Greenwood Technologies offers indoor wood boilers, shown in Figure D-1, which are capable of supplying 100,000–300,000 Btu/hr energy rates. The Greenwood wood boiler is incompliance with the emission levels recommended by the voluntary 2007 U.S. Environmental Protection Agency (EPA) Outdoor Wood-Fired Hydronic Heaters Program (Greenwood Technologies, 2007). Royall Manufacturing constructs both indoor wood boilers and outdoor wood furnaces (Figure D-2). Indoor wood boilers are available for heat output ratings of 95,000–250,000 Btu/hr and outdoor wood furnaces ratings of 200,000–490,000 Btu/hr (Royall Manufacturing, 2007). The Wood Doctor manufactures outdoor wood furnaces for use with an existing boiler system. Furnaces are available from 0.1 to 1.3 MMBtu/hr and may burn wood logs or chips (The Wood Doctor, 2006). Only the furnace, shown in Figure D-3, is supplied, and all operations are manual. Pro-Fab Industries manufactures fully automated multifuel outdoor (or optional indoor) boilers that burn corn, wood chips, wood pellets, coal, and agricultural residue cubes ranging from 0.75 to 2.5 MMBtu/hr (Pro-Fab, 2006). The solid fuel-fired hot-water boiler (Figure D-4) is engineered to automatically feed fuel and remove ash. A computerized control system manages all functions of the drive motors. This unit also includes a self-cleaning flue design with automatic spiral flue cleaners. Several units may also be placed in parallel for distributed heat to create a larger system.

Examples of full-scale combustion systems designed to use a wood feedstock include those from Messersmith, Chiptec, and Hurst. Messersmith manufactures boilers that burn solid fuels such as wood chips, sawdust, corn cobs, and wood shavings with heating outputs from 1.0 to 20 MMBtu/hr (Messersmith Manufacturing, Inc., 2006). The company also provides a fully automated system for solid fuel combustion (Figure D-5), including a storage in and fuel-handling, combustion, and control systems. The fuel-handling system, shown in Figure D-6, includes a traveling auger, storage bin, belt conveyors, and metering bin. The combustion system consists of a boiler, grates, and air blowers. The control system comprises the motors for the augers, conveyors, and blower as well as the control panel containing programmable logic controllers, sensors, switches, and the connecting cables. Chiptec manufactures biomass gasification systems (Figure D-7) ranging from 0.4 to 50 MMBtu/hr for fuels such as chips, sawdust, shavings, clean biofuel, agricultural and food-processing residue, pallets, paper pellets, railroad ties, and other biomass waste covering a wide range of moisture contents (6%–60%) (Chiptec Wood Energy Systems, 2006). A variety of automation methods are available for material handling, including moving-wedge systems, traveling-screw unloading systems, silos and silo-unloading systems, and belt and screw conveyors. Hurst solid fuel-fired boilers (Figure D-8) are designed for a wide variety of fuels including bark, hulls, rubber, sawdust, hog fuel, shavings, agricultural, coal, construction debris, sludge, sander dust, paper, and/or gas and oil as backup fuels. The following is a list of systems and components available for a solid fuel system:

- Deaerator (makeup water systems)
- Coal bunker storage
- Fuel conveyors
- Forced-draft fans and air systems
- Ash-handling conveyors
- Induced-draft fans and air systems
- Hurst Brand refractories
- Automated control systems
- Fuel-metering systems
- Ash reinjection systems
- Exhaust breeching and stacks
- Emissions control and monitoring
- Fire doors and grates
- Sootblower systems

Figure D-1. Greenwood indoor wood boiler (Greenwood Technologies, 2007).

Figure D-2. Royall Manufacturing indoor wood boiler (left) and outdoor wood furnace (right) (Royall Manufacturing, 2007).

Figure D-3. Wood Doctor outdoor wood furnace (The Wood Doctor, 2006).

Figure D-4. Pro-Fab coal, wood, and pellet hot-water furnace (Pro-Fab Industries, 2006).

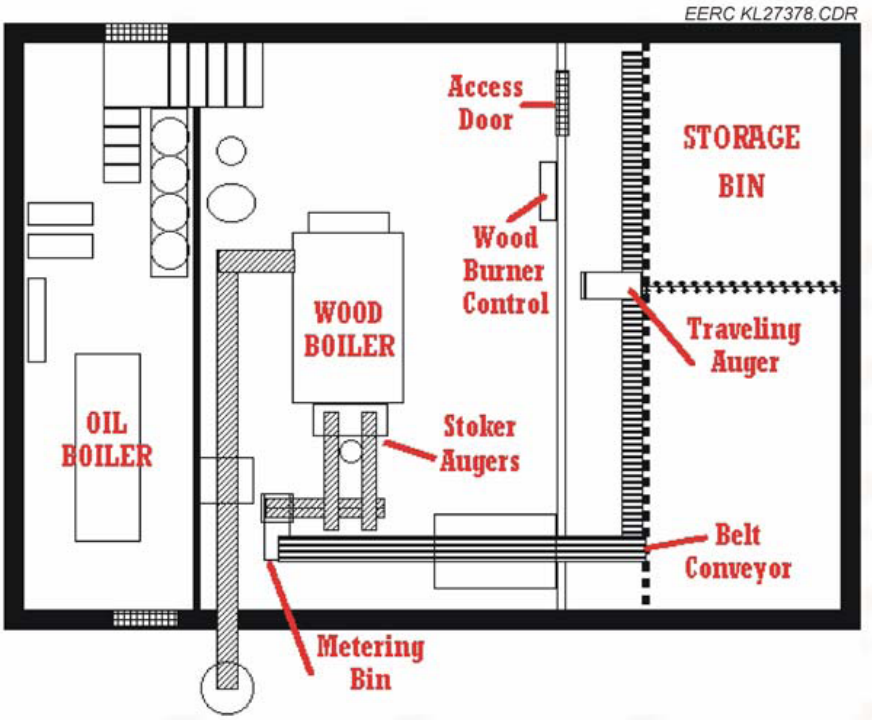

Figure D-5. Messersmith solid fuel combustion system designed to burn wood chips (Messersmith Manufacturing, Inc., 2006).

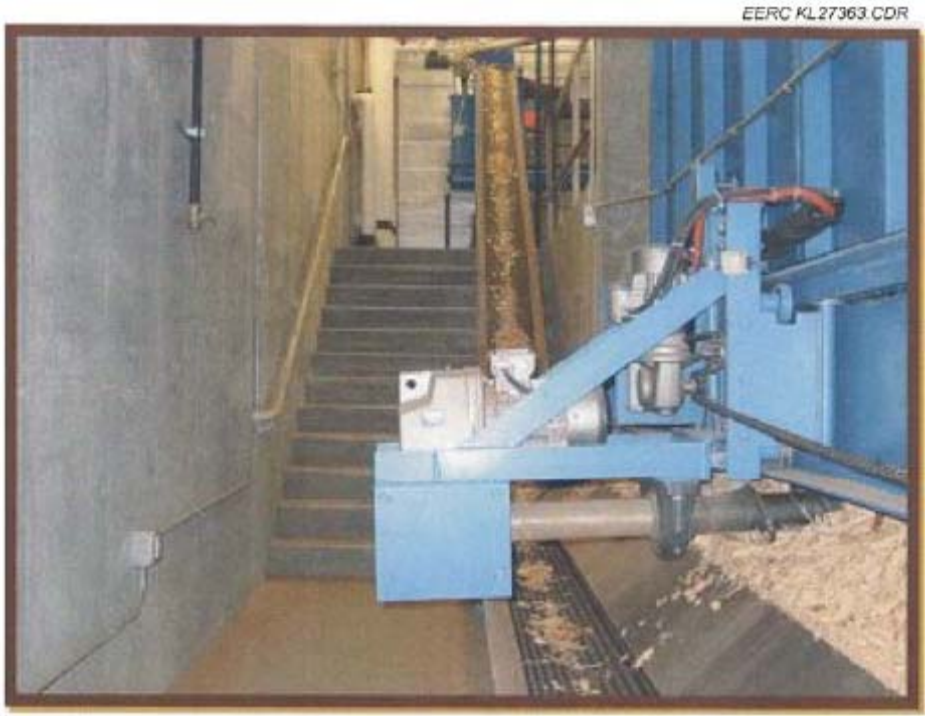

Figure D-6. Traveling auger and belt conveyors of the Messersmith system (Messersmith Manufacturing Inc., 2006).

Figure D-7. Chiptec gasifiers and boiler system (Chiptec Wood Energy Systems, 2006).

Figure D-8. Hurst solid fuel-fired boiler (Hurst Boiler & Welding Co., Inc., 2006).

REFERENCES

Chiptec Wood Energy Systems. www.chiptec.com (accessed June 2006).

Greenwood Technologies. www.greenwoodfurnace.com (accessed May 2007).

Hurst Boiler & Welding Co., Inc. www.hurstboiler.com (accessed June 2006).

Linderman, B.; Scheele, R. Fuels for Schools: A Prototype for the West; A Solution that Makes Sense, Bitterroot Resource, Conservation & Development Area, Inc., Fuels for Schools, U.S. Department of Agriculture Forest Service, www.fuelsforschools.org/pdf/FFSDarby_ Pilot_Project.pdf (accessed June 2006).

Messersmith Manufacturing, Inc. www.burnchips.com, (accessed June 2006).

Pro-Fab Industries. www.profab.org (accessed June 2006).

Royall Manufacturing, Inc. www.royallfurnace.com (accessed May 2007).

The Wood Doctor. www.wooddoctorfurnace.com (accessed June 2006).

D.1.B Combustion System Vendors

System Type	Manufacturer	Range, MMBtu/hr	Range, hp	Materials
Indoor Wood Boiler	Alternate Heating Systems, Inc.	0.1-1.0	3-30	Logs, sawdust, shavings, woodchips
	Greenwood Technologies	0.1-0.3	3-9	Logs
Indoor Wood Boilers & Outdoor Wood Furnaces	Kerr Heating Products	0.07-0.14	2-4	Logs
	Royall Manufacturing, Inc.	0.1-0.25 (B) 0.2-0.49 (F)	3-7 (B) 6-15 (F)	Logs, chips, pellets
	Charmaster Products	0.1-0.14 (B) 0.1 (F)	3-4 (B) 3(F)	Logs
Outdoor Wood Furance	The Wood Doctor	0.1-1.3	3-39	Chips, pellets
	Blaze King Industries	0.08-0.12	2-4	Logs
	Central Boiler, Inc.	0.18-1.0	5-30	Logs, pallets
	Heatmor, Inc.	0.1-0.85	3-25	Logs, pallets
	Northwest Manufacturing, Inc.	0.07-0.7	2-21	Logs
	Hud-Son Forest Equipment, Inc.	0.06-0.3	2-9	Logs
	Hardy Manufacturing Company, Inc.	0.12-0.25	4-7	Logs
	Mahoning Outdoor Furnaces	0.15-0.9	4-27	Logs
	Timber Ridge, Inc.	0.1-0.4	3-12	Logs
	Pro-Fab Industries, Inc.	0.75-2.5	22-75	Logs, chips
Full-System Combustion	Messersmith Manufacturing, Inc.	1-20	30-600	Chips, saw dust, and wood shavings
	Chiptec Wood Energy Systems	0.4-50	12-1500	Chips, sawdust, shavings, moisture content (6%–60%)
	Hurst Boiler & Welding Co., Inc.	2-60	60-1800	Chips, bark, sawdust, shavings

D.1.B Combustion System Vendors

System Type	Manufacturer	Included in Quote
Indoor Wood Boiler	Alternate Heating Systems, Inc.	For use with an existing boiler system, only the firebox is supplied, all operations are manual, cyclone separator for fly ash removal, automatic fuel delivery systems for densified biomass.
	Greenwood Technologies	For use with an existing boiler system, only the firebox is supplied, all operations are manual
Indoor Wood Boilers & Outdoor Wood Furnaces	Kerr Heating Products	For use with an existing boiler system, only the firebox is supplied, all operations are manual
	Royall Manufacturing, Inc.	
	Charmaster Products	
Outdoor Wood Furance	The Wood Doctor	For use with an existing boiler system, only the firebox is supplied, all operations are manual
	Blaze King Industries	
	Central Boiler, Inc.	
	Heatmor, Inc.	
	Northwest Manufacturing, Inc.	
	Hud-Son Forest Equipment, Inc.	
	Hardy Manufacturing Company, Inc.	
	Mahoning Outdoor Furnaces	
	Timber Ridge, Inc.	“JOB READY” pre-engineered self-install packages with pre-plumbed and pre-wired assemblies
	Pro-Fab Industries, Inc.	1.5 MMBtu output (PC 2520), includes feed auger, ash auger, cyclone; would need concrete slab, fuel bin; can be indoor or outdoor w/ or w/o metal shed
Full-System Combustion	Messersmith Manufacturing, Inc.	Includes combuster, boiler, storage bin, chip handling systems (conveying), cyclone (for particulates), training & start-up, one-piece stack for exhaust, control panel, draft fan
	Chiptec Wood Energy Systems	Fuel receiving and storage system, metering auger, feed system, gasifier, boiler, fan, cyclone, controls, stack and breeching, installed, start up and training
	Hurst Boiler & Welding Co., Inc.	Delivered, installed on existing concrete slab (Hurst provides design); additional cost for wood storage and conveyor system

D.1.B Combustion System Vendors

System Type	Manufacturer	Website	Phone	Toll-free
Indoor Wood Boiler	Alternate Heating Systems, Inc.	www.alternateheatingsystems.com	(717) 987-0099	
	Greenwood Technologies	www.greenwoodfurnace.com	(206) 203-6282	(800) 959-9184
Indoor Wood Boilers & Outdoor Wood Furnaces	Kerr Heating Products	www.kerrheating.com	(902) 254-2543	
	Royall Manufacturing, Inc.	www.royallfurnace.com	(608) 462-8508	(800) 944-2516
	Charmaster Products	www.charmaster.com	(218) 326-6786 or (218) 326-2636	
Outdoor Wood Furance	The Wood Doctor	www.wooddoctorfurnace.com	(239) 247-2079	
	Blaze King Industries	www.blazeking.com	(250) 493-7444 (509) 522-2730	
	Central Boiler, Inc.	www.centralboiler.com	(218) 782-2575	(800) 248-4681
	Heatmor, Inc.	www.heatmor.com	(218) 386-2769	(800) 834-7552
	Northwest Manufacturing, Inc.	www.woodmaster.com		(800) 932-3629
	Hud-Son Forest Equipment, Inc.	www.hud-son.com/woodfurnaces.htm		(800) 765-7297
	Hardy Manufacturing Company, Inc.	www.hardyheater.com	(601) 656-5866	(800) 542-7395
	Mahoning Outdoor Furnaces	www.mahoningoutdoorfurnaces.com	(814) 277-6675	(800) 692-5200
	Timber Ridge, Inc.	www.freeheatmachine.com	(423) 913-0515	(866) 966-3432
	Pro-Fab Industries, Inc.	www.profab.org	(204) 364-2211	(888) 933-4440
Full-System Combustion	Messersmith Manufacturing, Inc.	www.burnchips.com	(906) 466-9010	
	Chiptec Wood Energy Systems	www.chiptec.com	(802) 658-0956	(800) 244-4146
	Hurst Boiler & Welding Co., Inc.	www.hurstboiler.com	(229) 346-3545	(877) 944-8778

D.1.B Combustion System Vendors

System Type	Manufacturer	Fax	E-mail	Location
Indoor Wood Boiler	Alternate Heating Systems, Inc.	(717) 987-0055		Harrisonville, PA
	Greenwood Technologies	(206) 666-5494	Support@greenwoodtechnologies.com	Mukilteo, WA
Indoor Wood Boilers & Outdoor Wood Furnaces	Kerr Heating Products		info@kerrheating.com	Parrsboro, NS
	Royall Manufacturing, Inc.	(608) 462-8433	info@royallfurnace.com	Elroy, WI (hdqtr) Colville, WA (dealer)
	Charmaster Products	(218) 326-1065	info@charmaster.com	Grand Rapids, MN
Outdoor Wood Furance	The Wood Doctor	(902) 639-1232	info@wooddoctorfurnace.com	
	Blaze King Industries			Penticton, BC; Walla Walla, WA
	Central Boiler, Inc.	(218) 782-2580		Greenbush, MN
	Heatmor, Inc.	(218) 386-2947	woodheat@heatmor.com	Warroad, MN
	Northwest Manufacturing, Inc.			
	Hud-Son Forest Equipment, Inc.			
	Hardy Manufacturing Company, Inc.	(601) 656-4559	info@hardyheater.com	Philadelphia, MS
	Mahoning Outdoor Furnaces	(814) 277-6686		Punxsutawney, PA
	Timber Ridge, Inc.	(423) 913-0514		Jonesborough, TN
	Pro-Fab Industries, Inc.		info@profab.org	Arborg, MB Canada
Full-System Combustion	Messersmith Manufacturing, Inc.	(906) 466-2843	sales@burnchips.com	Bark River, MI
	Chiptec Wood Energy Systems	(802) 660-8904	BobBender@Chiptec.com	South Burlington, VT
	Hurst Boiler & Welding Co., Inc.	(229) 346-3874	solid-fuel-sales@hurstboiler.com	Coolidge, GA

UNIVERSITY OF NORTH DAKOTA ENERGY & ENVIRONMENTAL RESEARCH CENTER BIOMASS GASIFIER SYSTEM

INTRODUCTION

The University of North Dakota (UND) Energy & Environmental Research Center (EERC) has been actively completing feasibility studies for biomass-based heating systems and cogeneration projects over the past 5 years and has a 50-year history of industry-focused research concerning fossil energy, renewable energy, and environmental technologies. Most significant to the demonstration of a gasification system is the EERC's experience in assessing biomass resources, expertise in a broad array of conventional and new, alternative energy technologies, and experience completing economic analyses used to justify project financing. The following outlines the process description; system components; emissions, permits, and site logistics; and pertinent EERC qualifications.

PROCESS DESCRIPTION

The system is a downdraft biomass gasification technology employing venturi scrubbing and filtering of the gas for use in a piston engine. Downdraft gasification was chosen for its ability to reduce the tar content of the product gas. Expected total gas contaminant concentration prior to filtration is 1000 ppm versus 100,000 ppm as seen in updraft and fluid-bed gasification (1). A process flow diagram is provided in Figure 1, and the EERC's portable 150-kW power system is shown in Figure 2. Fuel is automatically conveyed to the top of the reactor and metered using a robust agricultural platform feeder. The material is gasified in the reactor and cleaned with a venturi scrubber, which is known to remove particulate in the submicrometer range (1). The gas is then passed through a series of four filters. The first is a coarse filter to coalesce residual liquids, the second is a rejuvenating active sawdust filter, the third is a similar passive filter, and the fourth is a fabric bag filter. This system has been documented by Bechtel Laboratory to reduce total gas contaminants to less than 10 ppm (2). The gas, typically 130 Btu/scf, is fired in an engine. The costs for this work are based on a spark-ignited gas engine generator. Spark ignition engines have been demonstrated on producer gas (3, 4) and can operate with no fossil fuel input. Because engine life on producer gas is unknown, top-end rebuild could be expected once a year. Natural gas engines and landfill gas engines require top-end rebuild every 2 years and 8 months, respectively (5). Previous projects have operated over hundreds of hours; however, thousands of continuous hours have yet to be professionally documented.

SYSTEM COMPONENTS

The primary components of the system include 1) fuel storage and conveying, 2) gasification, 3) gas cleaning, 4) power production, and 5) ash and liquid handling. The following provides the detail of these components.

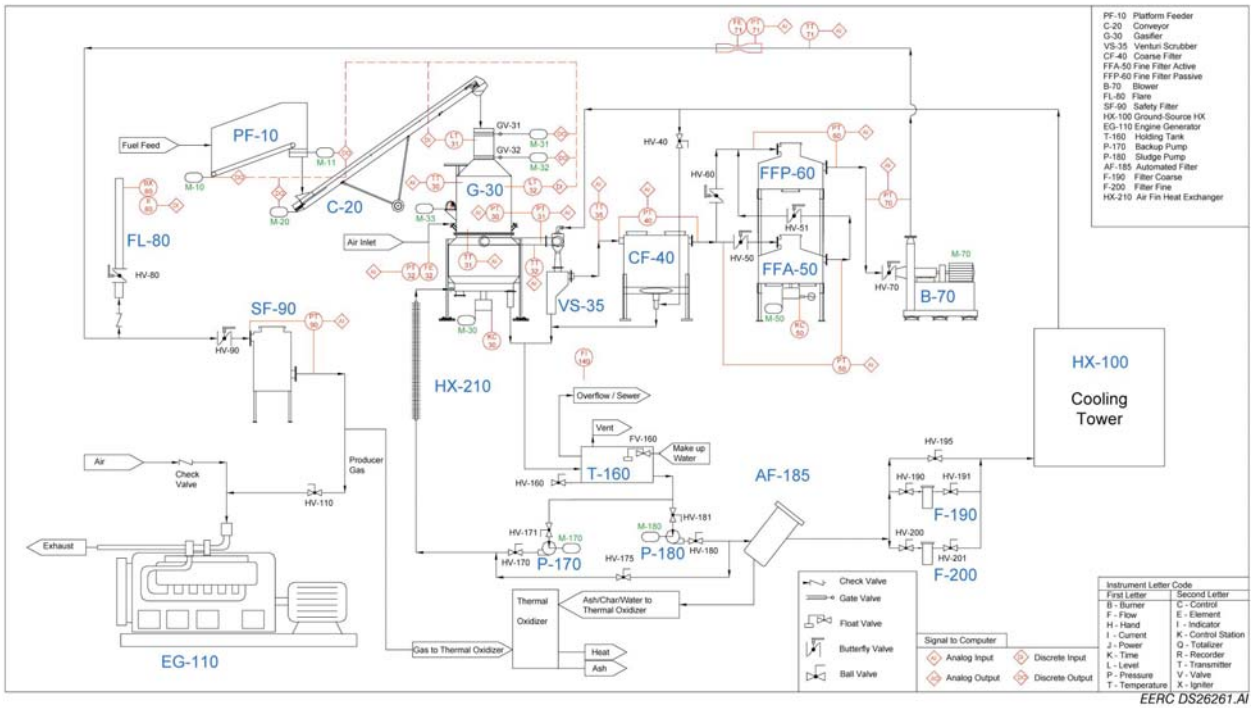

Figure 1. Process and instrumentation diagram.

Figure 2. The EERC's portable 150-kW power system.

1. Fuel storage and conveying – Fuel storage is determined from site logistics as there are several options from which to choose. Three hydraulic walking-floor trailers (Figure 4) are initially assumed sufficient to accommodate 3 days of storage and automated conveying. The trailers are mobile, with quick disconnect provided to an automatically controlled hydraulic power unit for unloading. The trailers convey to a platform feeder (Figure 4). The platform feeder handles a wide range of material and provides transfer to an 18-in.-wide inclined belt conveyor.

Figure 4. Walking-floor trailer example, platform feeder, and conveyor.

2. Gasification – Figure 5 shows the gasifier and general arrangement of the drying, pyrolysis, combustion, and char reduction zones in the gasifier. Downdraft gasifiers of this type (Imbert) produce low gas contaminants for two reasons. The bed is fixed (not fluidized), allowing for low carryover of particulates, and hydrocarbon vapors produced in the pyrolysis zone are drawn down through the high-temperature zone and cracked to lower hydrocarbons (less tar). The gasifier is under vacuum drawn by a high-pressure blower.

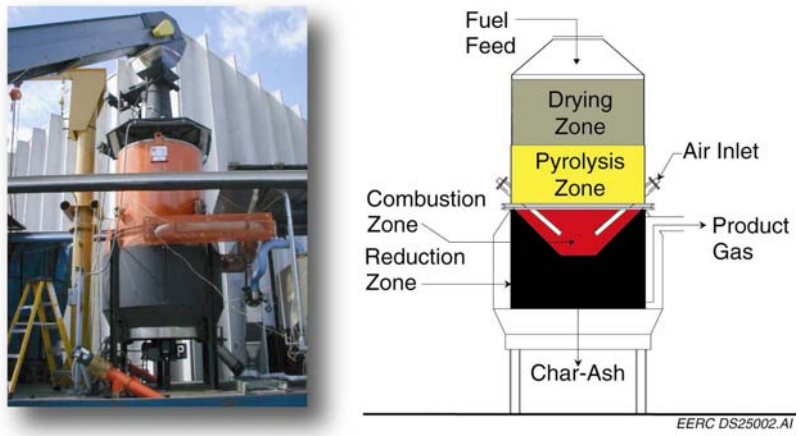

Figure 5. Downdraft gasifier.

3. Gas cleaning – Figure 6 depicts the venturi scrubber and filtration system. Wet scrubbing has several advantages with respect to cooling, cleaning, and maintenance. Producer gas must be clean and cooled for engine application. Various options include cyclones, shell-and-tube heat exchange, moving-bed filters, precipitators, etc. The venturi scrubber is the most compact, most effective, and least expensive gas-cleaning option. Venturi scrubbers can remove particles of less than 10 µm at high efficiency and simultaneously cool the gas. Other options are more expensive, less effective, and must be cleaned to remove deposits that inhibit heat exchange and performance. The filtration system downstream of the scrubber is simple, inexpensive, and provides additional cleaning to push contaminant levels below 200 ppm and down to 10 ppm. The first filter is a coalescing filter comprising wood blocks. The filter only requires periodic washdown and very limited media changes. The second filter uses sawdust and is actively stirred on a timer to prevent restriction to flow. The media requires replacement once a week. The remaining filters require minimal maintenance. The third filter is the same as the second without a stir. The final filter is a fabric bag, in service as a final safety catch, and is normally installed in proximity to the engine.

Figure 6. Venturi scrubber and filtration system – from left to right: scrubber, coarse filter, fine filter active, fine filter passive, and safety filter.

4. Power production – A spark-ignited engine is the power plant, such as the Cummins Model GTA 855 shown in Figure 7. This engine is capable of providing 110 kW operating on producer gas. The GTA855 is a four-stroke, turbocharged, six-cylinder natural gas engine. The GTA855 is a new addition to the Cummins natural gas engine product line and is available with a power rating of 287 kW @1800 rpm to 138 kW @1500 rpm. The EERC customizes the producer gas carburetion for this engine and provides standard paralleling switchgear.

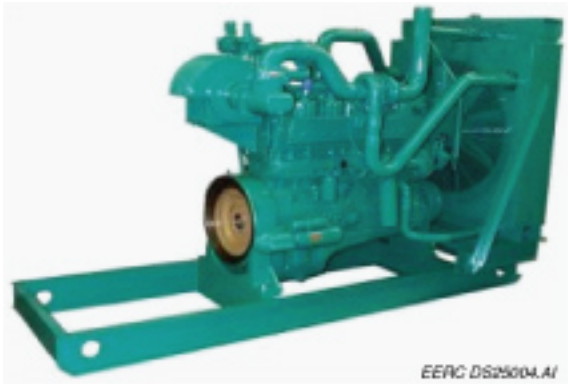

Figure 7. Cummins GTA 855 engine.

5. Ash and liquid handling – Charcoal/ash is removed from the gasifier using pumped water flow (slurry). Scrubbed particulate is combined with the charcoal stream. Water is used to provide a seal to the bottom of the gasifier. This method simplifies maintenance by eliminating the need for valves and quenching the charcoal to prevent dust and the potential for fires. Water/slurry level is maintained in a tank and pumped to an automated filter. The automated filter is typical for river sludge treatment and separates the solids from the recirculated water. The solids and a percentage of water are automatically flushed to the sewer, eliminating the need for ash disposal or handling. Water leaving the filter is passed through a final stationary filter prior to heat exchange. The scrubbing water is absorbing heat from the product gas and must be cooled prior to returning to the scrubber. Closed-loop ground-source heat exchange is proposed to eliminate the need for a cooling tower and water evaporation.

A process layout is shown in Appendix A, and a test run of the gasification system is shown in Appendix B.

An example mass and energy balance is provided in Figure 8 to reflect the generator requirements. The overall electrical production efficiency is 16% on a higher-heating-value basis. Gasifier efficiency is 80%, and engine efficiency is 20%. The liquid discharge rate is 58 lb/hr (7 gal/hr), and fuel requirements are equivalent to 5 tons/day (20% moisture).

EMISSIONS, PERMITS, AND SITE LOGISTICS

The EERC will handle permitting. General guidelines for a permanent engine generator apply. A catalytic converter for the engine exhaust may be required, and negotiation with the local utility or electric cooperative will be critical. Expected emissions are shown in Table 1.

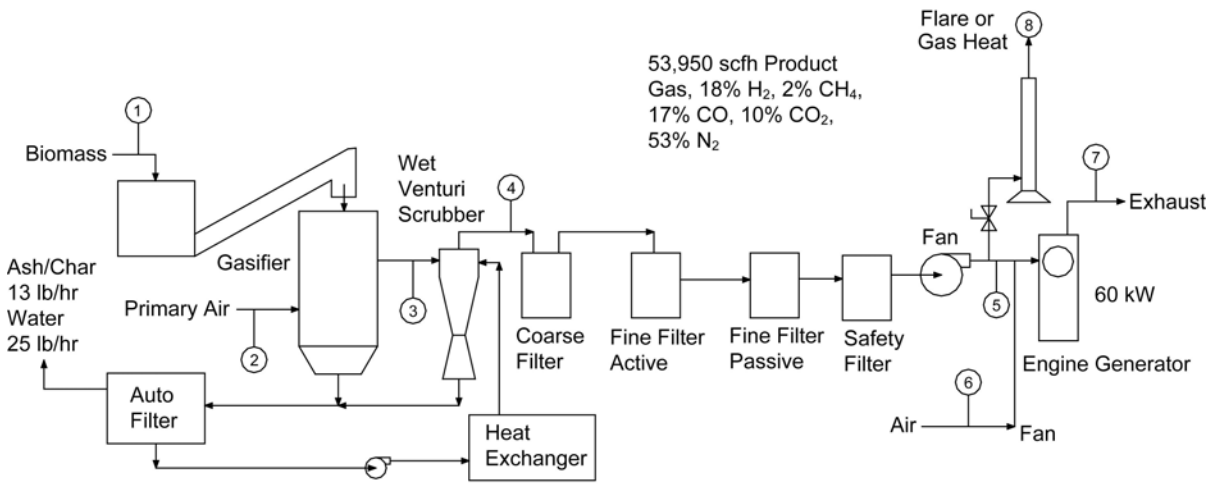

Location	1	2	3	4	5	6	7	8
Btu/hr	1,217,391	-	1,043,478	982,370	804,000	-	245,551	178,370
lb/hr	174	348	522	484	396	831	831	88
Temp, °F	68	68	1000	120	140	68	950	-

EERC DS25101.AI

Figure 8. Mass and energy balance.

Table 1. Expected Emissions

Emission	Rate, lb/kWh
NO_x	0.006
CO	0.024
Total Hydrocarbons	0.060
CO_2	4.2
SO_2	Minimal

Some solid and liquid waste production is expected. The ash exiting the gasifier is typically 5% to 10% of the fuel input. The intent is to send the ash to the sewer; however, the ash is relatively high in carbon content and can be marketed as charcoal. Otherwise, the ash is disposed of. Water is used to scrub the gas in a closed-loop system. A ground-source heat exchange system is proposed to cool the scrubbing water. Over time, the water collects organic material, which raises biological oxygen demand (BOD). The system requires flushing once a month at about 100 gallons of discharge. Permission can be obtained from the local sewer treatment facility. Typically, local treatment plants can treat small discharges of very high-BOD waste streams and do not charge for the service. The EERC has approved discharge with the Grand Forks, North Dakota, Water Treatment Plant. The EERC has measured scrubbing sludge and water produced by the gasification system and found the water to be 2500 BOD, and the sludge is a nonhazardous material under Resource Conservation and Recovery Act guidelines. Filter material used in the process is sawdust based and can be recycled into the gasifier. The makeup water requirement is minimal.

QUALIFICATIONS

The EERC is working on several projects involving the proposed biomass gasification technology. The EERC completed procurement and installation of a 200-kW$_e$ Ankur gasifier (WBG-200) on a 45-ft trailer at the EERC. The EERC provided the fuel feed system, ash handling, and heat removal. This system has been commissioned and operated for over 100 hours producing gas. The EERC has been very pleased with the quality of construction, technical assistance, rapid communication, and engineering provided by Ankur. The EERC has visited the factory in Baroda, India, and was impressed with the manufacturing shop, engineering, professionalism, and ability of Ankur to meet the delivery deadline to the United States. The EERC has discovered the technical details regarding specification of controls and equipment supplied from overseas to meet North American standards specific to a small gasification system.

Maintenance labor can be limited to 15 minutes per 8-hour shift through automation. Systems were visited in India by the EERC and found to be operating on such schedules. Typical recommended preventive maintenance is 1 day/week, which equals an availability of 85%. Engine life is unknown; however, diesel engines were found to have operated at 80% availability over a period of years firing 80% producer gas.

The EERC was originally established in 1949 under the Bureau of Mines. The organization was defederalized in 1983 and became a part of UND. The EERC has over a 50-year history of conducting research with industry. The EERC's 216,000 square feet of pilot plant, laboratory, and administrative facilities presently house over 280 scientists, engineers, and support staff (Figure 8). Work at the EERC for the first 35 years focused primarily on low-rank coal research

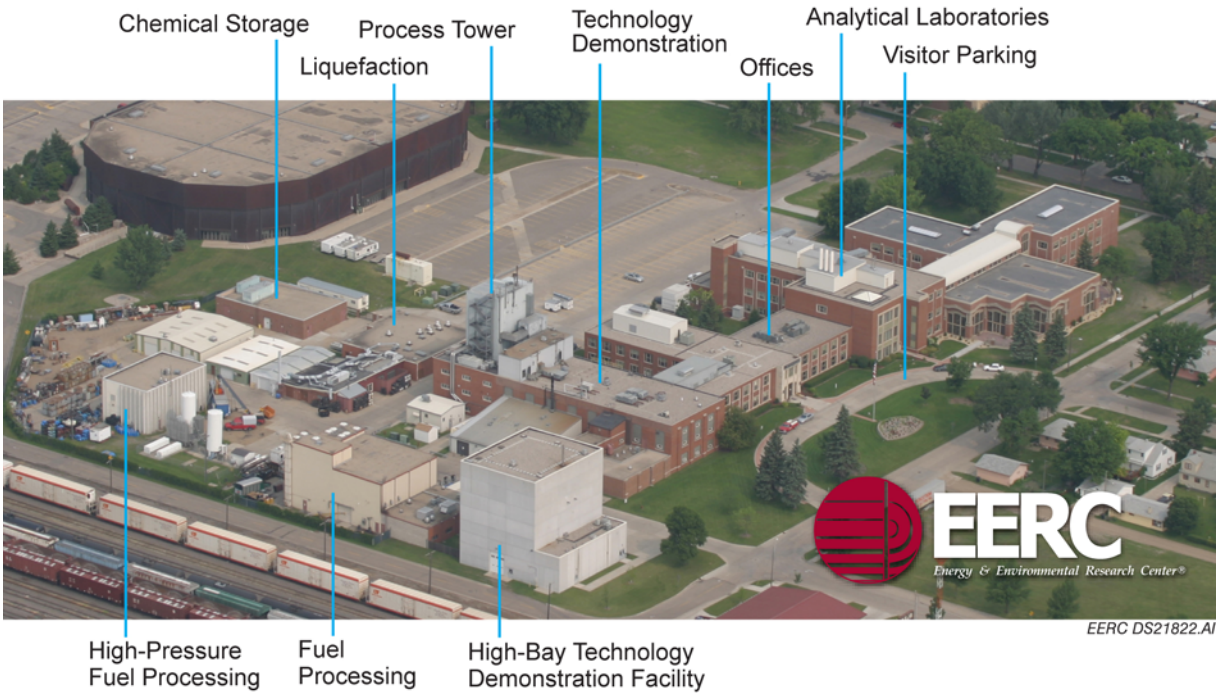

Figure 8. EERC facilities.

and related emission control technologies, and it has maintained its position as one of the world's leading coal research centers. The EERC has greatly broadened its focus since defederalization, with over 850 clients in 47 countries and all 50 states. The EERC specializes in research, development, demonstration, and commercialization of promising technologies. EERC projects now include experimental design, analytical methods development, groundwater and wastewater, carbon-based energy, advanced power systems, renewable energy and energy efficiency, nonfuel products from coal, atmospheric emission control, environmental management (cleanup technologies, reclamation of disturbed lands), waste utilization, waste disposal, database development, and education and training (community outreach, professional workshops, national and international conferences).

Experience directly relevant to the described system is as follows: Darren D. Schmidt, P.E., has been working on biomass energy for 10 years and authored numerous publications. Mr. Schmidt previously conducted a 1-MW_e biomass gasification demonstration project at Camp Lejeune Marine Corps Base. The work was performed under previous employment with Research Triangle Institute through a cooperative agreement with the U.S. Environmental Protection Agency. The project successfully fulfilled the terms of the contract and produced electricity paralleled to the utility grid for over 100 hours. Both theoretical and hands-on understanding of the process were developed over a 4-year project term. During this project and subsequent projects, Mr. Schmidt has reviewed, interviewed, and researched biomass gasification projects ranging from laboratory research and development reactors to unpublished failed commercial attempts and some successful systems operated within the United States and abroad. Mr. Schmidt, over the past 6 years with the EERC, has remained focused on maintaining a link with industry by conducting feasibility studies that enable private firms to justify the financing of biomass energy projects. The studies include resource assessment, fuel handling and processing design, environmental permitting, and economic sensitivity analysis. Mr. Schmidt is a registered professional engineer in North Dakota.

Kerryanne M.B. Leroux is a Research Engineer at the EERC, with an M.S. and a B.S. in Chemical Engineering. She has had several years of experience researching ethanol, biofuels, and hydrogen marketing and production. Ms. Leroux has performed economic analyses for a biorefinery, varying wind hybrid systems, and a cogeneration facility with differing scenarios in an industrial park. She has also researched markets for biodiesel fuel, heavy residual oil, and products of the biorefinery, and performed data analyses and statistical interpretations for numerous projects. Current efforts include research of unconventional biodiesel feedstocks.

Mr. Kyle E. Martin, also a Research Engineer at the EERC, received B.S. degrees in Chemistry and Chemical Engineering. Prior to his position at the EERC, Mr. Martin served as a Process Engineer for Champion/International Paper, where his work focused on thermomechanical pulping. He also served as a Project Engineer for Cargill Oilseeds Ltd., Clavette, Saskatchewan, and as a Research Engineer for Agriculture & Agri-Food, Scott, Saskatchewan. Currently, Mr. Martin is working in the areas of cogeneration, biomass energy, and fuel cells. His work at the EERC has also involved power plant testing for pollutants such as ammonia, chlorine, sulfur compounds, and mercury as well as development and testing of continuous emission monitors.

REFERENCES

1. Reed, T.B.; Das, A. *Handbook on Biomass Downdraft Gasifier Engine Systems*; SERI/SP–271-3022; CO, 1988.

2. Wen, H.; Lausten, C.; Pietruszkiewicz, J.; Delaquil, P.; Jain, B.C. Advances in Biomass Gasification Power Plants. American Power Conference, 1998.

3. Dogru, M. Fixed-Bed Gasification of Biomass. Ph.D. Thesis, University of Newcastle, UK, 2000.

4. Schmidt, D.D.; Purvis, C.R.; Cleland, J.G. Biomass Power Plant Demonstration at Camp Lejeune. In *Proceedings of the Bioenergy '98 8th Biennial Conference*; Madison, WI, Oct 1998.

5. Conversation with Ziegler Power Systems, a distributor for Caterpillar, June 12, 2003.

APPENDIX A

LAYOUT GENERALIZATION AND FOOTPRINT

General Layout and Footprint

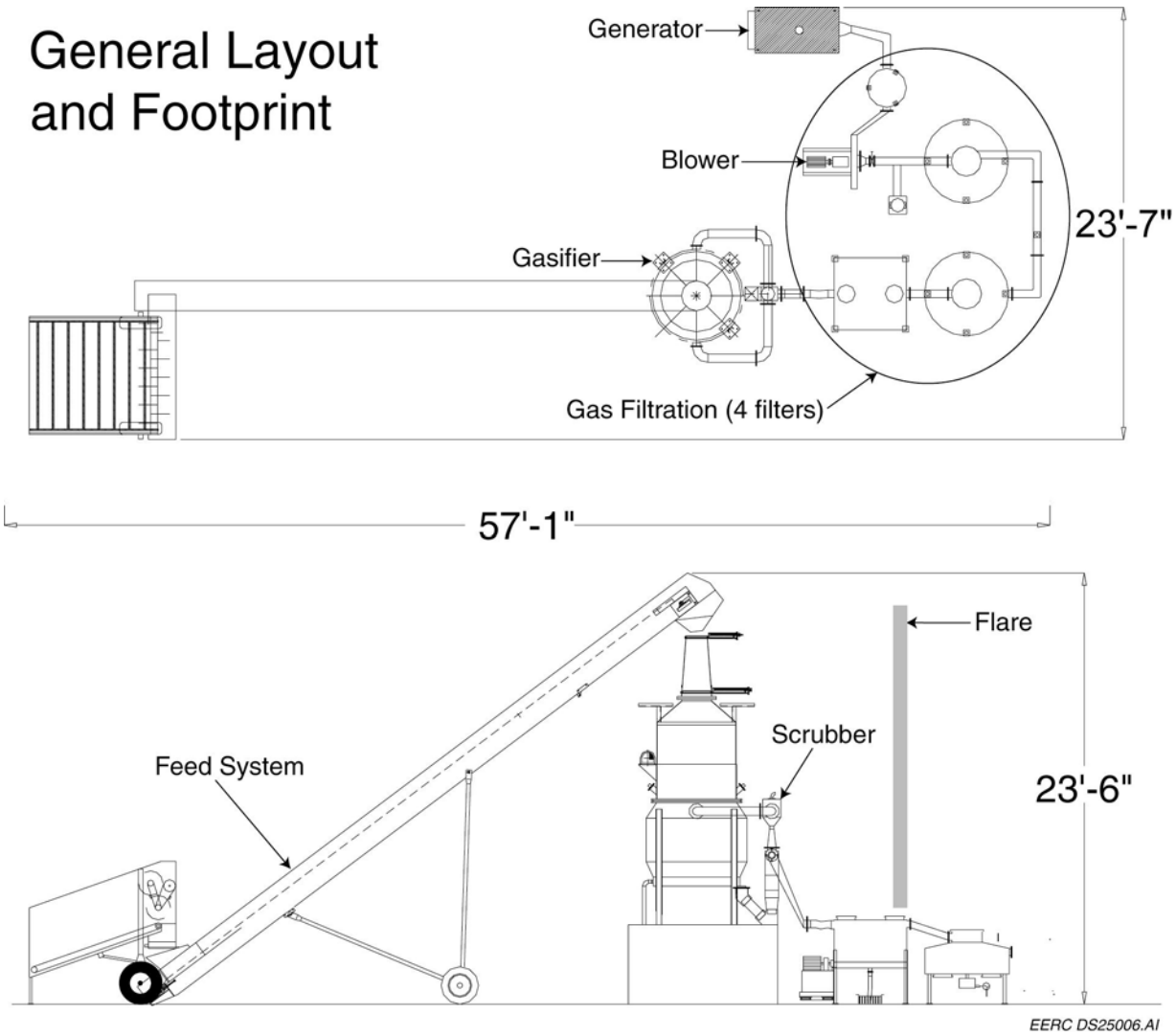

APPENDIX B

GASIFICATION TEST RUN

Gasification Test Run

8/23 – 8/25, 2004

48 hours firing hardwood chips

Chips were spread out and dried prior to the run (early data show average 20% moisture)

Chips were kept under a tarp and handled with a skid steer loader (Bobcat)

Example of feeding during the first night of operation

Daytime setup and operation (looking from a distance)

Softwood chips, left, hardwood chips, right

Operational photo

EERC DS25007.AI

Looking into the Air Nozzle (combustion zone)
Inside the Gasifier

Flare – Product Gas – Nighttime operation

Charcoal product from hardwood chips

Daytime Flare Operation – Colorless

Wood and Charcoal compared

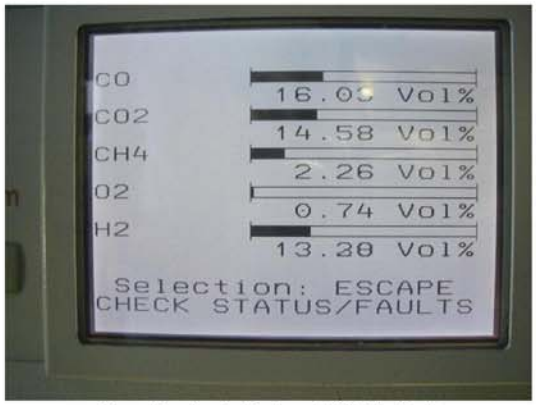

Gas Analysis Data – 116 Btu/scf

EERC DS25008.AI

Wood-fired Hydronic Furnaces

Smoke-free, high-efficiency heating for the home

Greenwood hydronic furnaces* burn so hot and clean, they produce almost no smoke, creosote or ash. When combined with a radiant or forced-air heating system, they can reduce winter heating bills by 70%. Each Greenwood furnace:

- **Clean Burning.** Burn wood completely, leaving no particles to create smoke, creosote or ash.
- **Energy Efficient**. Greenwood furnaces approach 85 percent thermal efficiency. That means most of the heat released by burning wood is captured to heat your home.
- **Economical**. Reduce your overall heating costs, saving up to 70% of your current heating costs.
- **Certified Safe**. As safe to operate as a home hot-water heater. Greenwood furnaces meet strict UL and CSA standards for indoor operation.
- **Low Maintenance**. Our furnaces do not need to be cleaned as often as wood stoves or inefficient outdoor furnaces.
- **Reliable Design**. Greenwood's proven design has been in operation for over 20 years and continues to provide safe, reliable, low-cost home heating for their owners.

Made in the USA

How the Greenwood Furnace Works

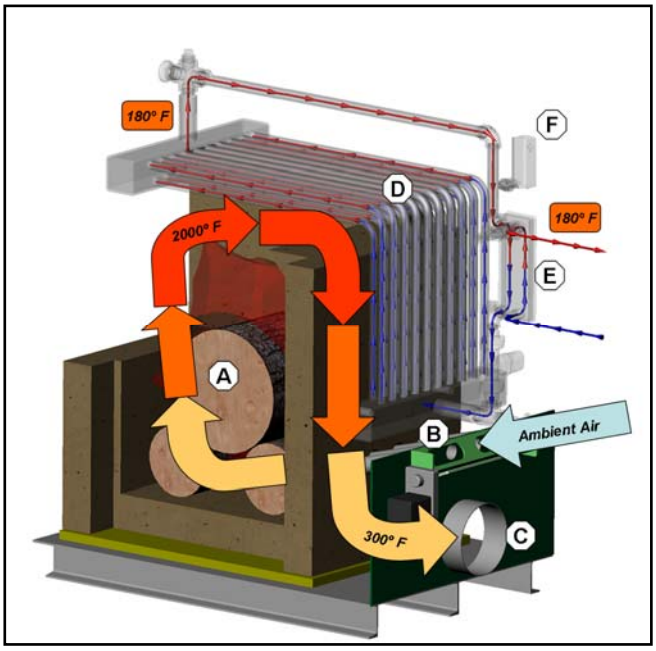

1. Logs are loaded into the firebox (A) and ignited with paper and kindling.
2. As the fire grows, fresh air is drawn through the air intake manifold (B), fanning the flames in the ceramic firebox. The burning wood gases reach 2000° F before flowing out of the firebox and down the flame path toward the exhaust vent (C).
3. As superheated air moves toward the vent, its energy passes to fluid flowing through an internal heat exchanger (D). This heat transfer fluid reaches 180° F before circulating to an external heat exchanger (E) mounted on the back of the furnace. Here, the energy produced by the furnace passes to your home.
4. Aquastats (water thermostats) (F) control the operation of the furnace by monitoring the temperature of the heat transfer fluid and regulating a damper on the air intake manifold (B). At the desired temperature in the house, the damper closes, shutting off the flow of fresh air and extinguishing the fire. When more heat is needed, the damper opens and the furnace re-fires. Heat stored in the refractory walls of the firebox support automatic re-firing for up to 24 hours.

* *"Hydronic furnace" is the term adopted by the American Society for Testing and Materials (ASTM) to describe devices formerly called "wood boilers." Wood-fired hydronic furnaces create hot water, but not steam.*

Greenwood Technologies, LLC

11661 SE 1st Street, Suite 200, Bellevue, WA 98005 ♦ 800-959-9184 ♦ Fax: 206-666-5494

www.GreenwoodFurnace.com

Greenwood Hydronic Furnace Specifications

Greenwood
Clean Burning Wood-Fired Furnaces

MODEL:	Greenwood 100	Greenwood 200	Greenwood 300
Furnace Output (BTU/hour)	100,000 BTU	200,000 BTU	300,000 BTU
Approx. Heating Capacity[1]	1,800 - 5,000 ft^2	4,000 - 10,000 ft^2	8,000 - 15,000 ft^2
Furnace dimensions	32"w x 52"h x 48"d	42"w x 52"h x 48"d	52"w x 52"h x 48"d
Max log length[2]	18 inches	28 inches	38 inches
Max log diameter *(door height)*	16 inches	16 inches	16 inches
Approximate Weight	2,350 pounds	3,000 pounds	3,700 pounds
Firebox Volume	19"w x 32"h x 24"d (8.4 cubic feet)	29"w x 32"h x 24"d (12.9 cubic feet)	39"w x 32"h x 24"d (17.3 cubic feet)
Flue Size	6 inches	7 inches	8 inches

Additional Information

Indoor/Outdoor Use	Greenwood's wood-fired hydronic furnaces meet UL and CSA standards for indoor heating appliances. With a 12-inch clearance required from combustible materials, the furnace may be located in your basement, garage, or shed.
Combustion Efficiency	Temperatures in the ceramic firebox reach nearly 2000° F, assuring almost total combustion of the wood fuel. Little particulate matter remains to create smoke, creosote or ash.
Thermal Efficiency	The Greenwood boiler is one of the most energy efficient wood-fired hydronic furnaces on the market. It achieves up to 85% thermal efficiency *(depending on the stage of the burn cycle)*.
Recommended Fuel	The furnace operates most efficiently with dry, unsplit logs. Heat output will vary with the species of wood burned, but as a practical matter, we recommend using whatever solid wood is readily available.
Fuel Duration[1]	A full load of hardwood will typically last 8 - 12 hours at peak demand and longer under milder conditions.
Combustion Chamber	The firebox is made of super-duty cast ceramic refractory with walls that are 4 to 6 inches thick.
Operating Temperature	The temperature inside the firebox ranges from 1600 to 2000° F depending on the fuel and stage of the burn cycle. The temperature of the heat transfer fluid is typically 165 - 180° F.
Exhaust Temperature	Combustion gases exit the furnace at an average temperature of 350° F.
Exhaust Pipe/Chimney	Correct exhaust sizing and installation is important to overall furnace efficiency. Our furnaces require a 6 to 8-inch flue pipe.
Draft Requirement	The Greenwood furnace requires a draft of 0.05" – 0.07" water column to operate efficiently.
Hot Water Storage Tank	Greenwood boilers provide heat-on-demand, eliminating the need for a hot water tank.
Backup Heating	Greenwood furnaces can be integrated with most existing heating systems, providing primary heat during the winter. Your existing system would serve as a backup.
Limited Warranty	Greenwood provides a limited warranty of 20 years for the firebox, 10 years for internal furnace parts and 1 year for the control system. Please see warranty for complete details.
Safety Certifications	OMNI-Test Laboratories, an independent agency, has certified Greenwood furnaces meet ANSI/UL-391 (U.S.) standards for solid-fuel and combination-fuel central and supplementary furnaces and CSA B366.1 (Canada) standards for solid fuel-fired central heating appliances.
Emission Levels	The EPA has proposed emission standards of 0.44lbs/MBTU to qualify for a "Green Label" program; some states are considering emission limits of 0.60 lbs/MBTU. The Greenwood boiler emissions are well below these levels.

[1] Heating capacity and fuel duration depend on many factors including construction quality, indoor/outdoor temperatures, etc.

[2] For maximum burn time, load wood with the length equal to the width of the door, enabling greatest wood density. Wood up to 24" in length may be loaded in the Model 100, but result in less firebox fuel density.

11661 SE 1st Street, Suite 200 Bellevue, WA 98005 · 206.203.6282 · 800.959.9184 · www.GreenwoodFurnace.com

v20070308us

ROYALL™
Royall Manufacturing, Inc.
The Alternative Energy Company

PRESSURIZED INDOOR BOILER

Proven Performance

- Royall stoves have been manufactured for over 35 years.

Selection

- Royall offers a wide variety of products to fit all your heating needs, including outdoor systems (pressurized boilers and water stoves), indoor forced air and indoor pressurized boilers.
- All systems are available in a variety of sizes.

The Boiler System Built to ASME Standards by Certified ASME Welders

All Royall boilers are built to the exacting standards of the American Society of Mechanical Engineers (ASME). Every aspect of boiler design, material and construction is inspected by the Hartford Boiler Inspection & Insurance Company. Boilers are also inspected on-site by the National Board of Boiler and Pressure Vessel Inspectors and are continually checked by our quality control team.

- 1/4" and 5/16" SA 36 steel assures safety and longevity.

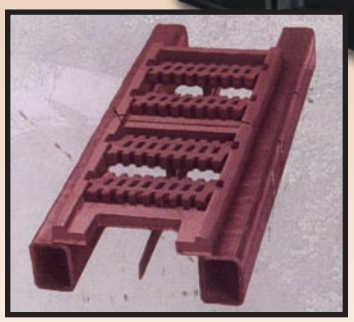

Shaker grates and doors are constructed from proprietary designs of extra heavy cast iron to prevent warpage.

www.royallfurnace.com

PRESSURIZED INDOOR BOILER

More Complete Combustion

- The fire brick lined lower fire box is shaped to maximize heat build-up.
- Positive seal door latch and warp-proof heavy steel door frame assure complete airtight design.
- Automatic forced air blower provides faster heat on command and promotes a longer burn time. A cast iron baffle directs airflow to promote better combustion over the length of the fire box.

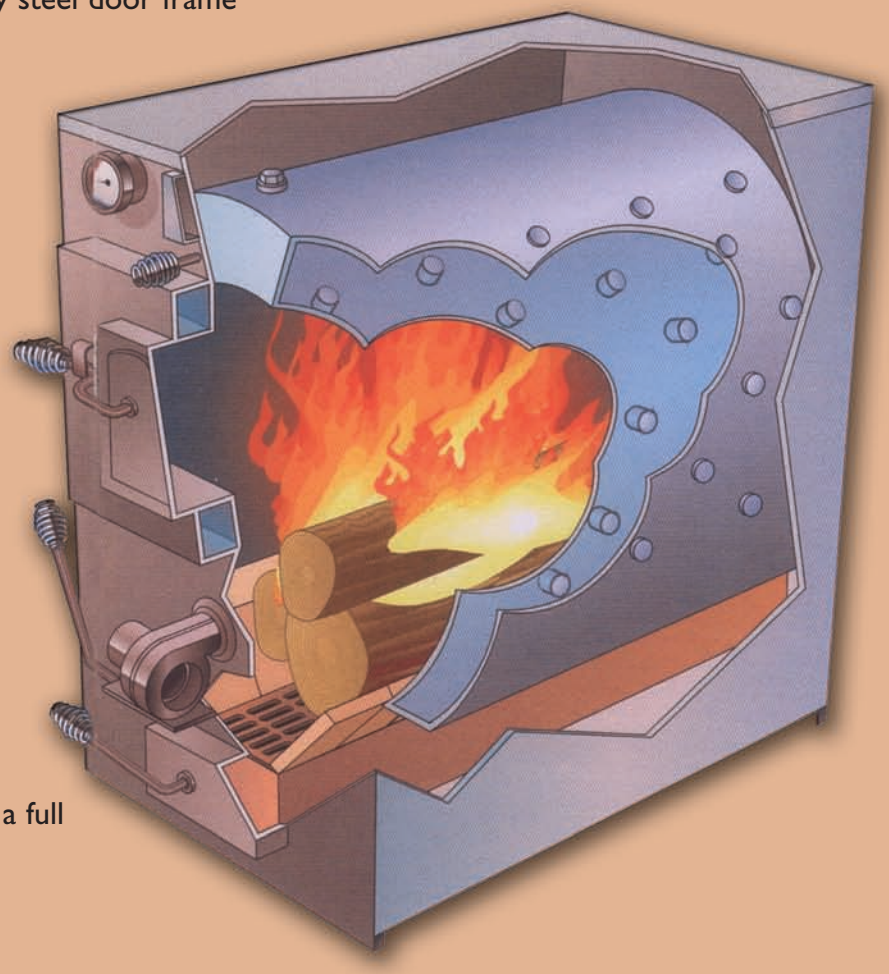

Low Maintenance Closed-System Design

- Closed system eliminates refilling.
- Convenient ash door and removable ash pan allow easy removal. Ash residue is greatly reduced thanks to more complete combustion.
- Pressure relief valve will discharge if the unit reaches 30 PSI.

Domestic Hot Water Provided

- Royall units can quickly and efficiently assure a full supply of hot water for domestic uses.

Indoor Pressurized Specifications

Model Number	Dimensions W x L x Ht	Estimated BTU	Water Capacity	Door Size	Approximate Weight	Log Length	Fire Box Volume	Supply & Return Fittings	Flue Size
6130	24" x 38" x 40"	130,000	23 Gallon	10" x 14"	780 lbs.	26"	6.25 cubic ft.	1½" ips	8"
6150	26" x 38" x 48"	150,000	35 Gallon	10" x 14"	905 lbs.	26"	8.1 cubic ft.	1½" ips	8"
6250	36" x 56" x 56"	250,000	135 Gallon	17" x 17"	1605 lbs.	43"	17.7 cubic ft.	2" ips	8"

Standard Equipment

The boiler is sold complete with the following items: draft blower, pressure relief valve, aquastat, pressure temperature gauge, spring handles, manual and information.

Accessories Available:

- Water to Air Coils
- Domestic Water Coils
- Circulation Pumps
- Additional Supplies

ROYALL™
Royall Manufacturing, Inc.
The Alternative Energy Company

www.royallfurnace.com

ROYALL™
Royall Manufacturing, Inc.
The Alternative Energy Company

NON-PRESSURIZED OUTDOOR BOILER

Heavy-Duty Construction

- Our water stoves use corrosion-resistant 304 gauge stainless steel–not the lighter 409 gauge offered by competitors.

Proven Performance

- Royall stoves have been manufactured for over 35 years.

Selection

- Royall offers a wide variety of products to fit all your needs, including outdoor systems (pressurized boilers and non-pressurized stoves), indoor forced air and indoor hot water.
- All systems are available in a variety of sizes.

Rugged Construction Inside and Out

- Unitized construction assures stability over years of use.
- Heavy-duty doors and specially designed grates prevent warping.

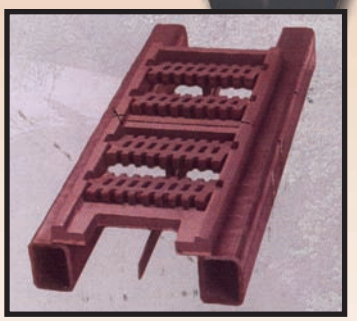

Shaker grates and doors are constructed from proprietary designs of extra heavy cast iron to prevent warpage in pressurized units.

www.royallfurnace.com

NON-PRESSURIZED OUTDOOR BOILER

Wet Back/Wet Front Water Jackets Ensure Maximum Heat Transfer

- Our even-flow jacket design spreads the heat over the stove to resist warping or cracking.

Low Maintenance Design

- Convenient ash door and removable ash pan allow easy removal. Ash residue is greatly reduced thanks to more complete combustion.

Domestic Hot Water Provided

- Royall units can quickly and efficiently assure a full supply of hot water for domestic uses.

Ideal for Multiple Building Use

- One system can heat several buildings.
- Preferred by businesses for heating offices, manufacturing plants, materials storage areas, and multi-vehicle garages.

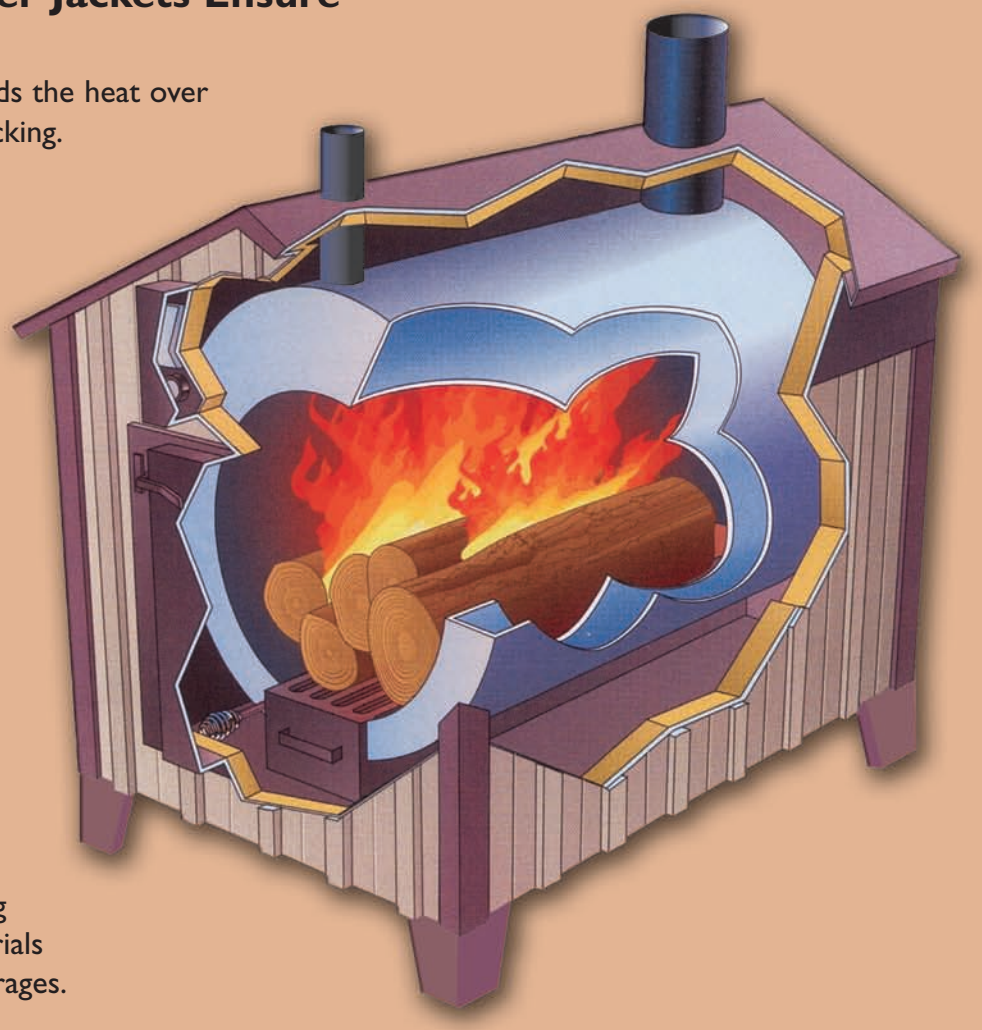

Outdoor Non-Pressurized Specifications

Model Number	Dimensions W x L x Ht	Water Capacity	Fuel Door	Approximate Weight	Log Length	Fire Box Volume	Supply & Return Fittings	Flue Size
7200	56" x 57" x 94"	100 Gallon	19" x 24"	1400 lbs.	30"	15.0 cubic ft.	1¼" ips	6"
7300	56" x 72" x 94"	145 Gallon	19" x 24"	1610 lbs.	43"	21.0 cubic ft.	1¼" ips	6"
7400	72" x 84" x 102"	380 Gallon	24" x 32"	2700 lbs.	56"	49.0 cubic ft.	1¼" ips	8"

The heating area which a stove can handle is affected by many factors such as: the heat loss of the building, climate, insulation, wind, type of wood or coal, moisture content of the wood, etc.

Standard Equipment

The stainless water stoves are sold complete with the following items: draft blower, aquastat, temperature gauge, spring handles, and information manual.

Accessories Available:

- Water to Air Coils
- Domestic Water Coils
- Circulation Pumps
- Additional Supplies

ROYALL™
Royall Manufacturing, Inc.
The Alternative Energy Company

www.royallfurnace.com

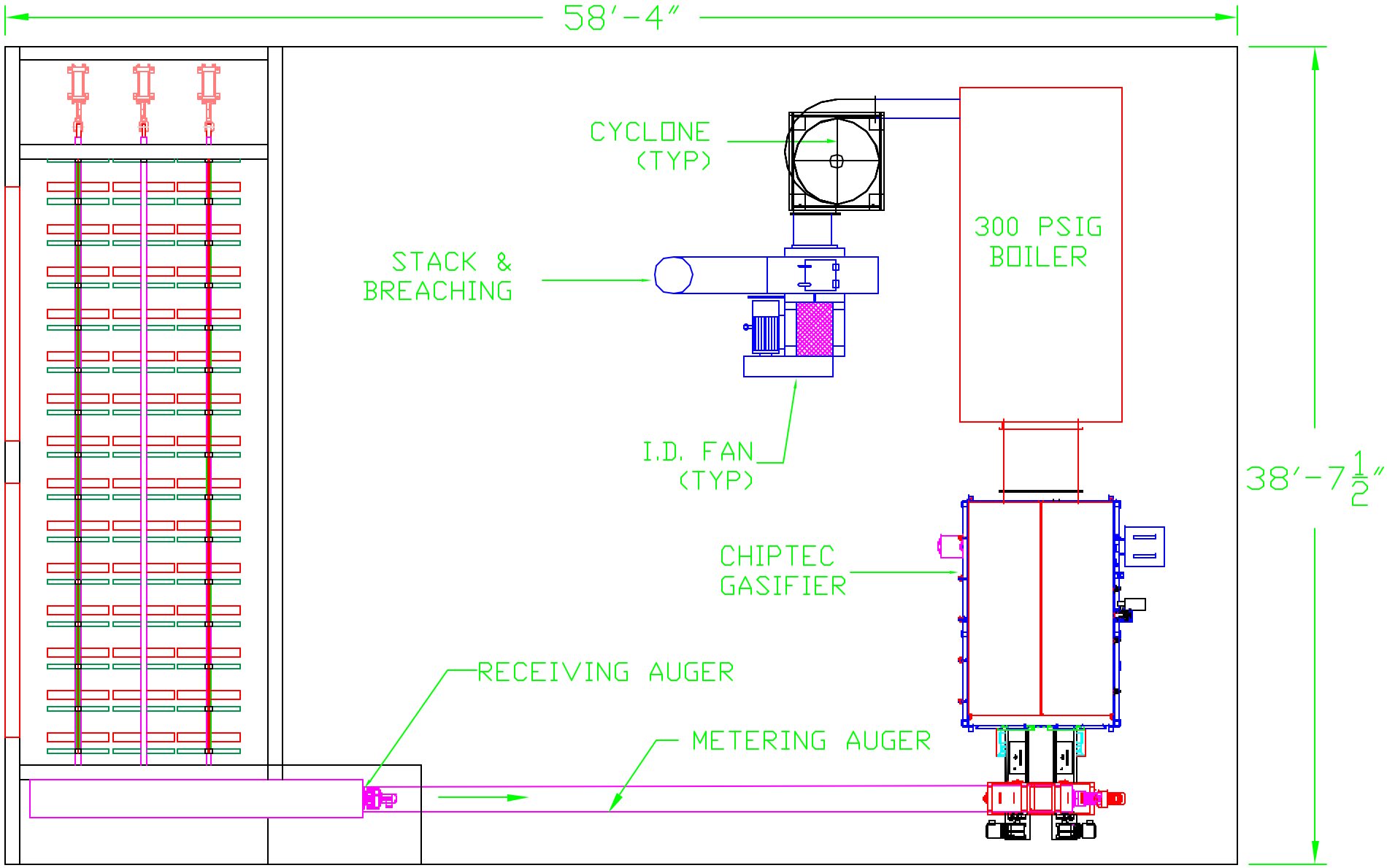

Any unauthorized use or disclosure of any confidential or propriety information discovered from this drawing without prior written consent from CHIPTEC CORP. may be subject to a restraining order and triple damages.

CHIPTEC
WOOD ENERGY SYSTEMS

48 Helen Avenue
South Burlington
Vermont 05403
Tel: 802-658-0956
Fax: 802-860-8604
Shop: 802-453-4919

REVISIONS

DATE	BY	DESCRIPTION

PROJECT NAME

SAMPLE LAYOUT
300HP BOILER

SIZE	SHEET NO.
C	1 of 1

DATE	SCALE: NONE
FILE:	DRWN BY: JP
	CHKD BY: BN

CHIPTEC®

WOOD ENERGY SYSTEMS

Pollutants	lb./MMBtu	USA Federal Government AP-42 Emission Factors lb./MMBtu
Total Particulates*	0.1 -0.2	0.22-0.3
Oxides of Nitrogen:	0.3	0.49
Carbon Monoxide:	0.3	0.6
Total Organic Compounds:	0.06	0.06
Sulfur oxides:	0.025	0.025

* Emission factors for systems utilizing mechanical particulate collection devices

In the United States, harmful emissions are regulated at various levels depending on the location of the emission device. The Federal government has developed a representative emission factor for wood fired boiler systems. These values are an average for the entire country and are named "AP-42 Emission Factors". Each local government has the ability to enact stricter emission regulations than the federal government. Throughout the years, Chiptec has installed over 100 gasification systems & has performed tests to verify the emission output rates. Based upon this information, Chiptec has developed it's own set of emission factors that are below the AP-42 emission factors. Typically, the Chiptec emission factors are acceptable in areas of the country with very strict environmental regulations. The only pollutant that may required additional treatment is the particulates. This is easily accomplished through additional hardware that collect the particulates to an acceptable level.

48 Helen Avenue
So. Burlington,
Vermont, 05403
802-658-0956
Fax: 802-660-8904
www.chiptec.com

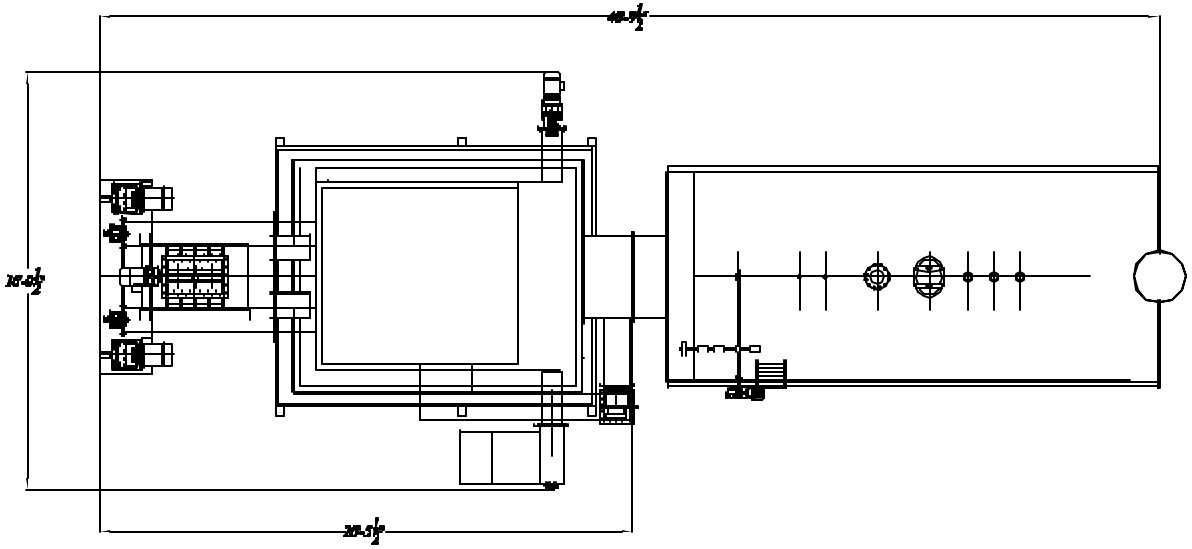

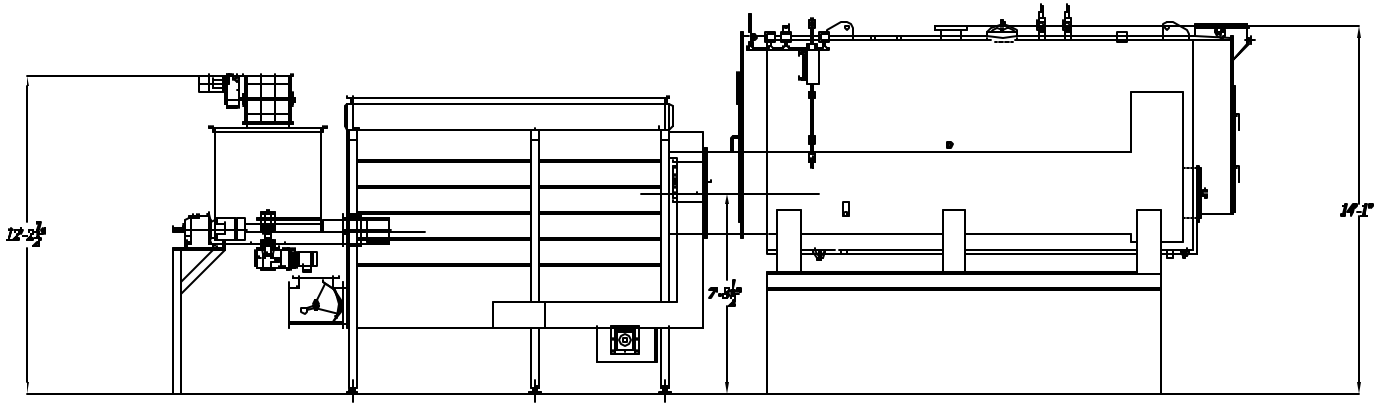

BILL OF MATERIALS		
ITEM	QTY.	DESCRIPTION
X	X	XXXXXXXX

CHIPTEC

WOOD ENERGY SYSTEMS

49 Helen Avenue
South Burlington
Vermont 05403
Tel: 802-658-0956
Fax: 802-660-8904
Shop: 802-463-4919

DWG. TITLE: 400hp Gaslfier & Boiler Fuel: 20% MC			SIZE: A	SHEET NO: 1 of 1
REVISIONS			SCALE: XXX	DATE: XXXX
			DRWN BY: SH	FILE: XXXX
			CHKD BY: CHIPTEC	

CHIPTEC®

WOOD ENERGY SYSTEMS

Fuel Materials, Usage, and Management

Chiptec gasification technology is unique in that, as opposed to a one chamber, relatively hot box, (1850 F.), or "Stoker System", we operate our gas producer at a relatively low temperature. (1000 to 1400 F.) This allows the use of "marginal fuels", i.e., fuels with higher Mineral Content, and/or lower mineral melting, or fusion points. It also allow for a wider variety of Moisture Content materials, from 8 to 55% M.C., (Wet Basis.)

Conversely, in the oxidation zone, in the boiler, we operate at a relatively higher temperature, (2,300 F.) Hot enough to oxidize otherwise escaping volatile organics. This can reduce air quality treatment costs, increase carbon efficiencies, and allow the use of additional fuel materials with organic or formaldehyde resins, such as glued up woods, M.D.F, plywood, particle board, etc.

The result of this technical innovation, now 20 years old, is that we essentially have an "Organic Oxidizer", and can utilize a wide variety of fuel materials, with varying mineral and moisture contents, so long as we keep a certain base line, and agreed upon fuel specification range.

When you mix this capability with a concept of "Engineered Fuels" you have the opportunity to continually chase the lowest cost acceptable material over the life cycle, and still maintain a fuel mix that is satisfactory for the equipment and the desired loads.

This also allows, or even invites, a continual management of fuel operating costs versus operating efficiencies, over time. This aspect of your project should be constantly researched, compiled and managed, to keep control of long term operational, i.e., fuel acquisition costs, as you go into the future. If your fuel mix creates additional operating costs such as sacrifice of load, additional maintenance, or reduced run times, simply watch the cost curve to determine the breakeven for the lower cost material.

48 Helen Avenue
So. Burlington,
Vermont, 05403
802-658-0956
Fax: 802-660-8904
www.chiptec.com
chiptec@together.net

CHIPTEC®

WOOD ENERGY SYSTEMS

48 Helen Avenue
So. Burlington,
Vermont, 05403
802-658-0956
Fax: 802-660-8904
www.chiptec.com
chiptec@together.net

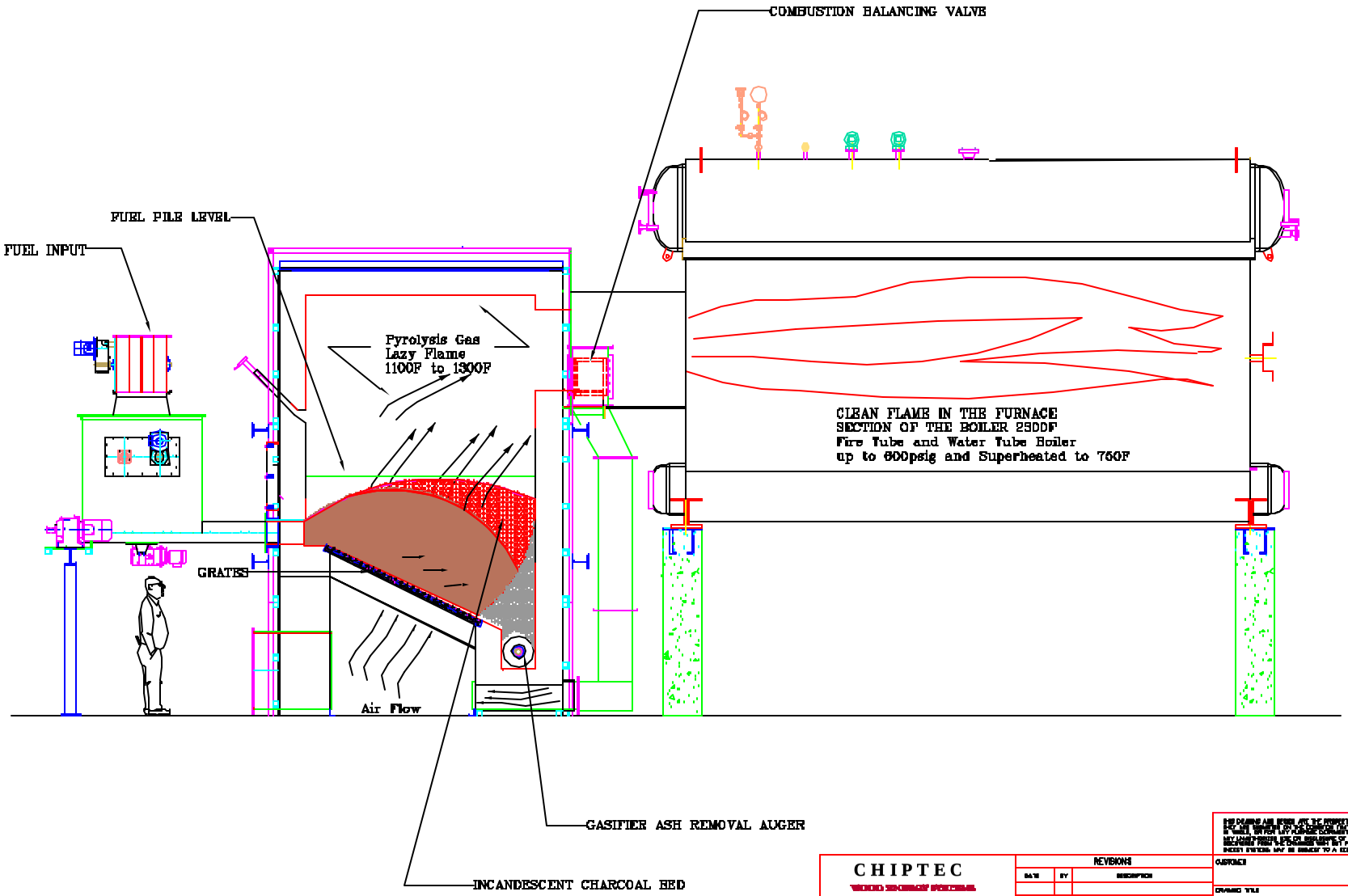

CHIPTEC

REVISIONS

DATE	BY	DESCRIPTION

CUSTOMER

DRAWING TITLE

B-SERIES GASIFIER FLOW DIAGRAM

DATE	SCALE	REV	SHEET NO.
		0	1 OF 1

DRAWING NUMBER

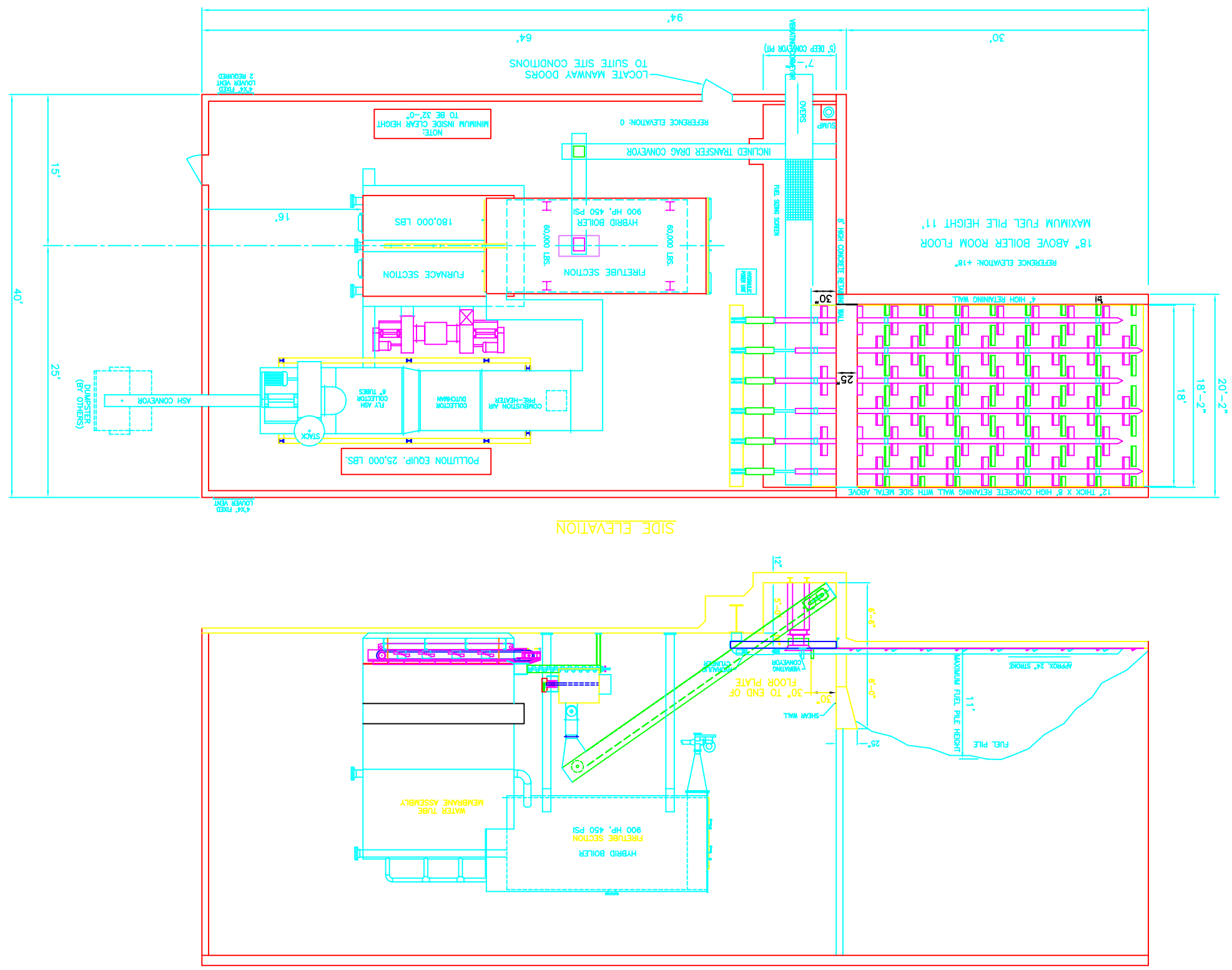
PLAN VIEW
SIDE ELEVATION
MINIMUM INSIDE BUILDING CLEAR HEIGHT=32'-0"
NOTE:
1. CONCRETE TO BE 3000 PSI MIN. 28 DAY STRENGTH.
2. SOIL TO BE 2500 PSF MIN.
3. BOILER ROOM SLAB THICKNESS TO BE 6" MIN.
4. ALL PIERS, FOOTINGS, AND OTHER CONCRETE DETAILS ARE FOR A TYPICAL INSTALLATION ONLY. CHECK LOCAL AND STATE AGENCYS FOR COMPLIANCE. ADJUST AS NEEDED.
HURST BOILER & WELDING CO., INC. ASSUMES NO RESPONSIBILITY FOR CONCRETE DESIGNS.
HURST BOILER and WELDING CO., INC.
P.O. DRAWER 820, HOBBY 319 S. COOSAUDE, GA. 31728
PHONE: 912-346-3540 FAX: 912-346-3814
BOILER ROOM LAYOUT
job: NEW ENGLAND AIR SYSTEMS
WILLISTON, VT.
900 HP HYBRID SERIES MH-MODULAR PACKAGED II
450 PSI DESIGN
SCALE: 1/4"=1'2"
DWN. BY: DM
DATE: 10/29/01
CHK'D. BY: JHO
DRAWING NO.: 5003075
REVISIONS
REASON FOR CHANGE
THIS DRAWING IS THE PROPERTY OF HURST BOILER AND WELDING CO., INC. AND MAY NOT BE COPIED OR REPRODUCED IN ANY WAY UNLESS AUTHORIZED IN WRITING BY HURST BOILER AND WELDING CO. AND MUST BE RETURNED UPON REQUEST
94'
64'
30'
15'
40'
25'
16'
18'
20'-2"
18'-2"
6'-3"
8'-0"
12'
11'
25"
30"
4"X4" FIXED LOUVER VENT 2 REQUIRED
LOCATE MANWAY DOORS TO SUITE SITE CONDITIONS
7'-1" (5' DEEP CONVEYOR PIT)
VIBRATING CONVEYOR
SERVO
SUMP
INCLINED TRANSFER DRAG CONVEYOR
REFERENCE ELEVATION: 0
NOTE: MINIMUM INSIDE CLEAR HEIGHT TO BE 32'-0"
REFERENCE ELEVATION: +18"
18" ABOVE BOILER ROOM FLOOR
MAXIMUM FUEL PILE HEIGHT 11'
4' HIGH RETAINING WALL
12" THICK X 8' HIGH CONCRETE RETAINING WALL WITH SIDE METAL ABOVE
FUEL SAWS SCREEN
FUEL SCREW CONVEYOR
FRETUBE SECTION
60,000 LBS
HYBRID BOILER 900 HP, 450 PSI
FURNACE SECTION
180,000 LBS
POLLUTION EQUIP. 25,000 LBS.
STACK
RT ASH COLLECTOR 6" TUBES
COLLECTOR DUTCHMAN
COMBUSTION AIR PRE-HEATER
ASH CONVEYOR
(2) DUST COLLECTORS
SHEAR WALL
30" TO END OF FLOOR PLATE
VIBRATING CONVEYOR
HYDRAULIC CYLINDER
FUEL PILE
MAXIMUM FUEL PILE HEIGHT
APPROX. 24" STROKE
WATER TUBE MEMBRANE ASSEMBLY

Reciprocating Grate
Combustion System

HURST *The Solid Fuel People*

(1) Hybrid" Firetube/Watertube Vessel Design
(2) Watertube Section
(3) Firetube Section
(4) Reciprocating Fire Grates
(5) Under Fire Air Fan
(6) Reciprocating Drive
(7) Over Fire Fan/Dampers
(8) Carry-Over Reinjection Blower
(9) Fire Door
(10) Ash Clean Out Door
(11) Optional Back Up Burner
(12) Fuel Metering Bin
(13) Ash Removal Conveyor
(14) Refractory Arch

The Hybrid RG design is suitable for applications to produce high pressure steam or hot water in ranges from 3,450 – 60,000 lbs/hr (3.4 mmBTU – 60 mmBTU) output from 100 up to 400 PSI. This system is designed by HBC to combine the best technologies from the "old school" of biomass combustion and the latest advanced combustion control technologies. The new HBC reciprocating grate-type stoker system permits biomass fuels with a high proportion of incombustibles to be combusted in an efficient manner with the added advantage of automatic de-ashing. This combination is particularly suitable for heating applications in lumber dry kilns, veneer log vats, veneer dryers, greenhouses, factories, schools and office buildings. This combination enables these systems to provide a flexible and reliable operation utilizing a consistent "grade" of biomass waste with moisture contents ranging from 30 – 50%. The boiler vessel is a two pass hybrid design incorporating a water tubed boiler-type water membrane and a two-pass fire tube scotch marine vessel. This vessel's advantages over standard water tube boilers include much larger steam disengagement area providing high quality steam, larger steam storage capability for quicker response to sudden steam demand and much larger thermal storage that provides fast demand response times and safer operation.

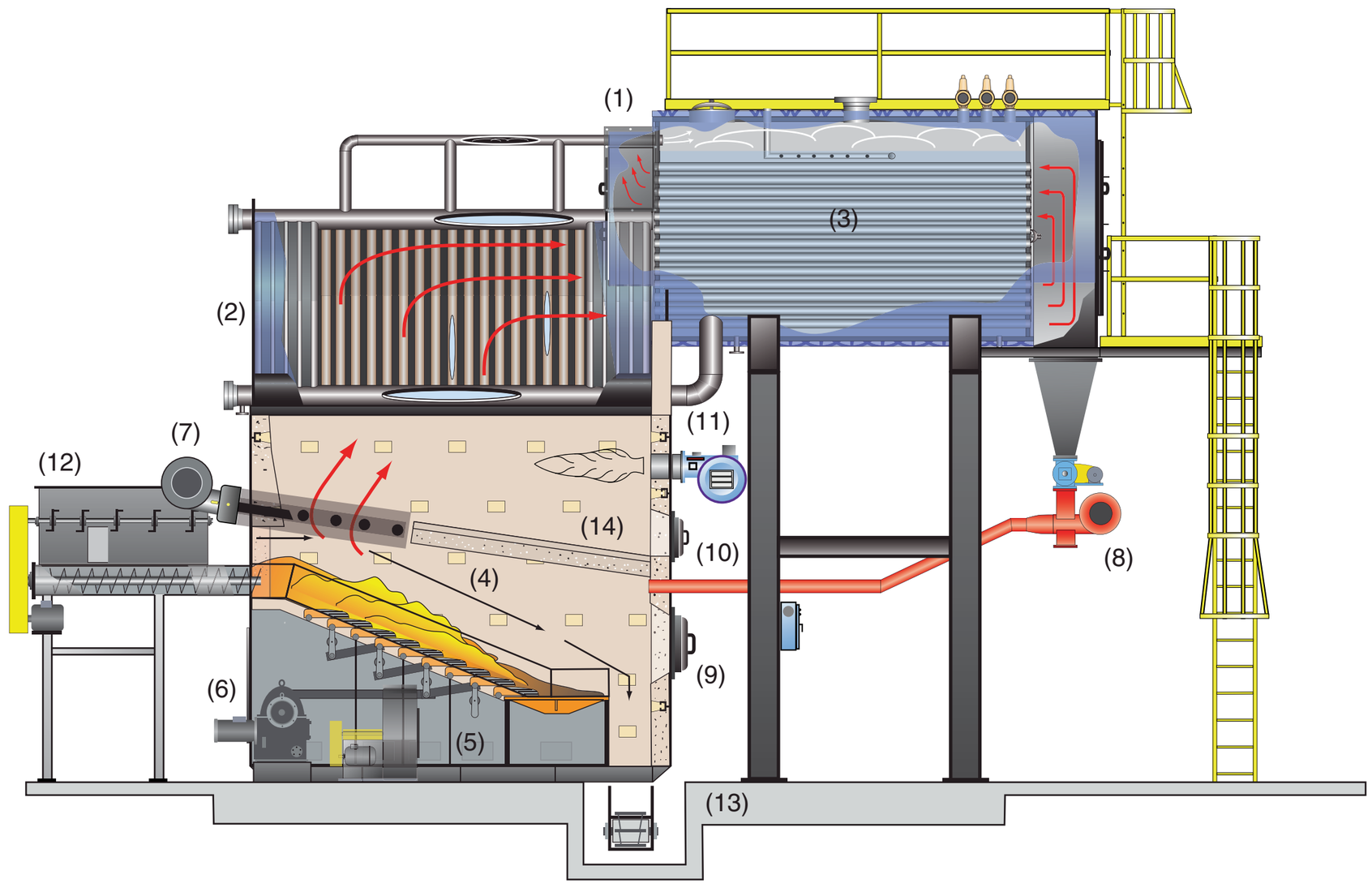

HURST BOILER & WELDING CO., INC.
P. O. Drawer 530
21971 Highway 319 N.
Coolidge, Georgia 31738
Toll Free: 1-877-994-8778
Tel: (229) 346-3545
Fax.(229) 346-3874
Email: info@hurstboiler.com

CAT # W-02

HURST HYBRID RG

Reciprocating Grate System | **Modular Packaged**

Reciprocating Grate
Combustion System

HURST

Fuel Room

(1) "Hybrid" Firetube/Watertube Vessel Design
(2) Watertube Section
(3) Firetube Section
(4) Reciprocati ng Fire Grates
(5) Under Fire Air Fan
(6) Reciprocating Drive
(7) Over Fire Fan/Dampers
(8) Carry-Over Reinjection Blower
(9) Fire Door
(10) Ash Clean Out Door
(11) Optional Back Up Burner
(12) Fuel Metering Bin
(13) Ash Removal Conveyor
(14) Refractory Arch
(15) Reciprocating Floor/Fuel Storage
(16) Hydraulic Driven System
(17) Vibrating Conveyor / Classifier
(18) Fuel Transfer Conveyor A
(19) Fuel Transfer Conveyor B
(20) Over Sized Fuel Material for Chipping line

Boiler Room

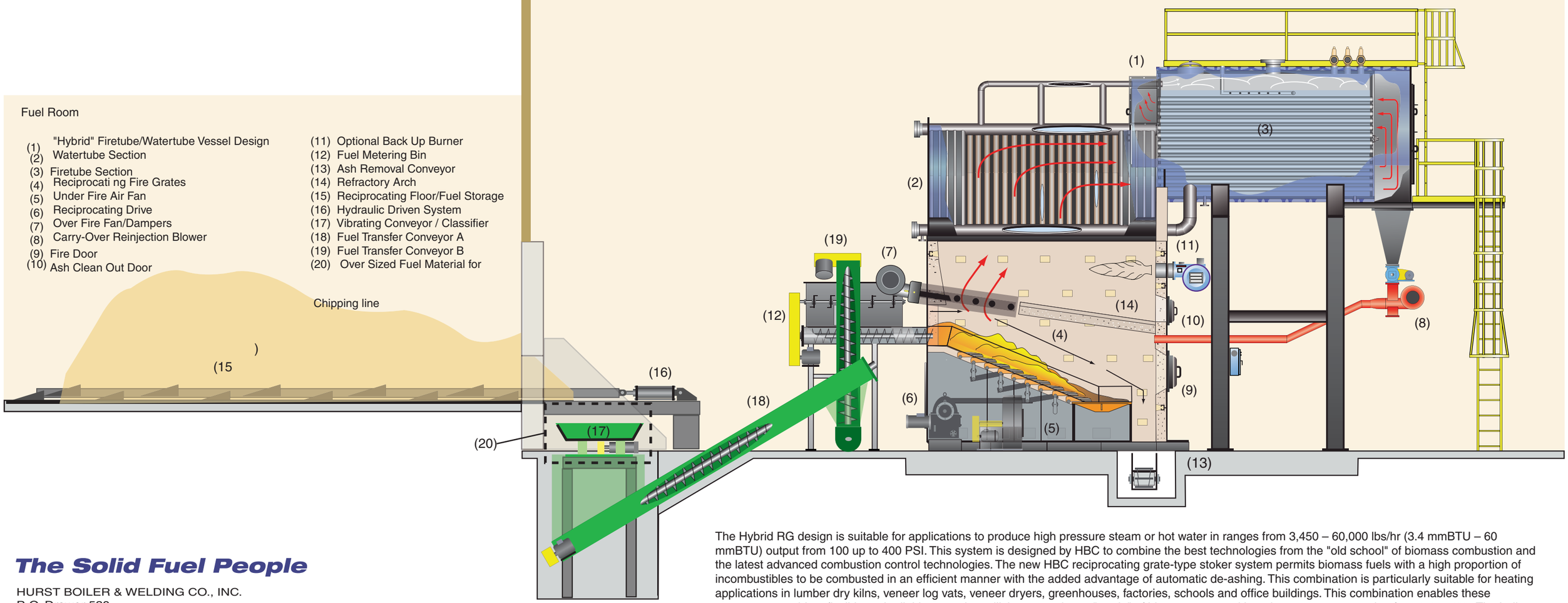

The Hybrid RG design is suitable for applications to produce high pressure steam or hot water in ranges from 3,450 – 60,000 lbs/hr (3.4 mmBTU – 60 mmBTU) output from 100 up to 400 PSI. This system is designed by HBC to combine the best technologies from the "old school" of biomass combustion and the latest advanced combustion control technologies. The new HBC reciprocating grate-type stoker system permits biomass fuels with a high proportion of incombustibles to be combusted in an efficient manner with the added advantage of automatic de-ashing. This combination is particularly suitable for heating applications in lumber dry kilns, veneer log vats, veneer dryers, greenhouses, factories, schools and office buildings. This combination enables these systems to provide a flexible and reliable operation utilizing a consistent "grade" of biomass waste with moisture contents ranging from 30 – 50%. The boiler vessel is a two pass hybrid design incorporating a water tubed boiler-type water membrane and a two-pass fire tube scotch marine vessel. This vessel's advantages over standard water tube boilers include much larger steam disengagement area providing high quality steam, larger steam storage capability for quicker response to sudden steam demand and much larger thermal storage that provides fast demand response times and safer operation.

The Solid Fuel People

HURST BOILER & WELDING CO., INC.
P. O. Drawer 530
21971 Highway 319 N.
Coolidge, Georgia 31738
Toll Free: 1-877-994-8778
Tel: (229) 346-3545
Fax.(229) 346-3874
Email: info@hurstboiler.com

CAT # W-08 **HYBRID RG**

Reciprocating Grate System **Modular Packaged**

APPENDIX E

ECONOMIC CALCULATIONS

Appendix E.1 Grinder Quote Comparison

Company	Model	Engine hp, avg	Rate, tons/hr	Rate, MMBtu/hr	Delivered Price	Fuel*, gal/hr	Fuel, MMBtu/hr	Cost*, per hr	Avg Operation Hours*
Bandit Chippers	Model 2680	440	50	700	$290,965	20	2.8	$60	40
Bandit Chippers	Model 3680	700	70	980	$372,550	27	3.8	$81	28
West Salem Machinery	3456-Brute (diesel portable)	550	10	140	$350,000	25	3.5	$75	198
West Salem Machinery	4064-Big Brute (diesel portable)	1000	20	280	$475,000	39	5.4	$116	99
West Salem Machinery	3456-Brute (electric stationary)	550	12	165	$250,000	432	1.5	$52	169
West Salem Machinery	4064-Big Brute (electric stationary)	1000	24	329	$300,000	785	2.7	$95	84
Vermeer Manufacturing	HG6000	525	38	525	$390,000	25	0.1	$76	53

Company	Model	Amortized Capital*	Annual Fuel Cost	Other*, per year	Total Annual Cost	Avg Chipping Cost, per ton	Avg Chipping Cost, per MMBtu
Bandit Chippers	Model 2680	$36,371	$2,376	$637	$39,384	$19.89	$1.40
Bandit Chippers	Model 3680	$46,569	$2,291	$685	$49,545	$25.02	$1.76
West Salem Machinery	3456-Brute (diesel portable)	$43,750	$14,842	$14,850	$73,442	$37.09	$2.61
West Salem Machinery	4064-Big Brute (diesel portable)	$59,375	$11,483	$14,850	$85,708	$43.29	$3.05
West Salem Machinery	3456-Brute (electric stationary)	$10,870	$8,801	$6,930	$26,601	$13.43	$0.95
West Salem Machinery	4064-Big Brute (electric stationary)	$13,043	$8,001	$6,930	$27,975	$14.13	$0.99
Vermeer Manufacturing	HG6000	$78,000	$4,008	$16,210	$98,217	$49.60	$3.49

Factors

2544 Btu/hr per hp

0.7457 kW/hp

*Amortized Capital:

Bandit Chippers - assuming 8-year service life

West Salem - assuming 8-year service life for portable diesel unit, 23-year service life for electric stationary unit

Vermeer - assuming 5-year service life

*Fuel: Units in kWh/hr for electric grinders

*Cost: Based on $3/gal diesel, $0.12/kWh

*Average Operation Hours: Based on the average wood chipping requirement of 1980 tons annually

*Other:

Bandit Chippers - Based on 100 days operation per year, interest (7%), maintenance @ $150-160/yr, operating @ $250/yr, insurance, bits

West Salem - Based on $7.50/ton operation and repair costs, not including labor for diesel, $3.50/ton electric

Vermeer - Based on $307/hr operation and maintenance costs

Appendix E.2.A. Indoor Wood Boiler and Outdoor Wood Furnace Manufacturer Quotes

System Size, Btu/hr	75,000–90,000	100,000	140,000–150,000	175,000–185,000	200,000–230,000	250,000–275,000	300,000	350,000	400,000–425,000	500,000	600,000	750,000	800,000	950,000–1,000,000
Greenwood Furnace		$7,500			$9,600		$11,500							
Royall Manufactur-ing, Inc.					$6,000 – $7,500		$7,500 – $8,500			$11,500 –12,500				
Charmaster Products		$3,200 – $3,500			$3,800 – $4,200									
Northwest Manufact-uring (The Wood Master)	$4,400	$5,900		$5,300/ 7,600				$6,700				$13,000		
Johnson and Son	$6,100				$6,700		$7,800							
New Horizon Corporation	$4,500		$5,400		$6,000	$7,000								
Heatmor Outdoor Furnace	$4,900 – $5,500				$5,600 – $6,600				$6600 – $8,300		$14,000 –15,000		$20,000 –22,000	
Tarm USA, Inc.		$11,000	$13,000											
Garn Equipment	$14,000 –16,000								$25,000 – 27,000					$50,000 – $52,000
Alternate Heating Systems, Inc.		$7,886	$8,877 – $9,479	$9,967	$11,475					$23,900				$56,750
Wood Doctor					$6,500				$7,500		$8,600			$16,000
Clean Wood Heat, LLC	$7,500				Coming Soon!									

Appendix E.2.B Estimated Indoor Wood Boiler Capital Investment

Heating Rate, Btu/hr	Capital Quoted	Est. Heating Area, sq ft	Est. Capital, sq ft
125,000	$4,500	1923	$2.34
150,000	$4,600	2308	$1.99
250,000	$5,700	3846	$1.48

Building	Required Heating Rates, Btu/hr	Est. Capital, sq ft	Est. Capital	Rounded
Average Home	65,000	$3.50	$3,496	$3,500
School	520,000	$0.92	$7,362	$7,400
Clinic	260,000	$1.44	$5,744	$5,700
Tribal Council Building	234,000	$1.54	$5,531	$5,500
Native Corporation Office	104,000	$2.59	$4,137	$4,100
Grocery Store	182,000	$1.81	$5,055	$5,100

65 Btu/hr/sqft Assumed

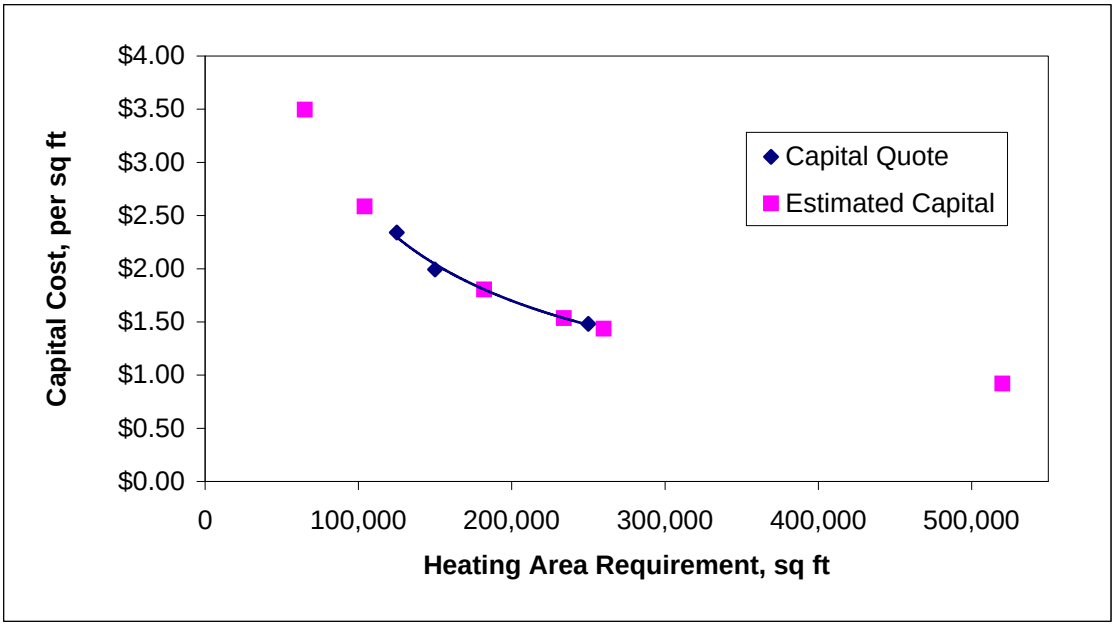

Appendix E.2.C Estimated Outdoor Wood Furnace Capital Investment

Min Heating Rate, Btu/hr	Max Heating Rate, Btu/hr	Average Heating Rate, Btu/hr	Min. Capital Quoted	Max Capital Quoted	Average Capital	Est. Heating Area, sq	Est. Capital, sq ft
75,000	90,000	82,500	$4,400	$7,500	$5,950	1269	$4.69
100,000	100,000	100,000	$3,200	$11,000	$7,100	1538	$4.62
140,000	150,000	145,000	$5,400	$13,000	$9,200	2231	$4.12
175,000	185,000	180,000	$5,300	$7,600	$6,450	2769	$2.33
200,000	230,000	215,000	$3,800	$9,000	$6,400	3308	$1.93
250,000	275,000	262,500	$7,000	$7,000	$7,000	4038	$1.73
300,000	300,000	300,000	$7,500	$11,500	$9,500	4615	$2.06
350,000	350,000	350,000	$6,700	$6,700	$6,700	5385	$1.24
400,000	425,000	412,500	$6,600	$8,300	$7,450	6346	$1.17
500,000	500,000	500,000	$11,500	$12,500	$12,000	7692	$1.56
600,000	600,000	600,000	$8,600	$15,000	$11,800	9231	$1.28
750,000	750,000	750,000	$13,000	$13,000	$13,000	11538	$1.13
800,000	800,000	800,000	$20,000	$22,000	$21,000	12308	$1.71
950,000	1,000,000	975,000	$16,000	$16,000	$16,000	15000	$1.07

Building	Required Heating Rates, Btu/hr	Est. Capital, sq ft	Est. Capital	Rounded
Average Home	65,000	$4.89	$4,889	$4,900
School	520,000	$1.41	$11,312	$11,000
Clinic	260,000	$2.14	$8,553	$8,600
Tribal Council Building	234,000	$2.28	$8,197	$8,200
Native Corporation Office	104,000	$3.69	$5,910	$5,900
Grocery Store	182,000	$2.65	$7,407	$7,400
Residential Group (3–4 homes)	227500	$2.32	$8,104	$8,100
Clinic, Tribal Council Building, Native Corporation Office	598,000	$1.30	$11,968	$12,000

65 Btu/hr/sqft Assumed

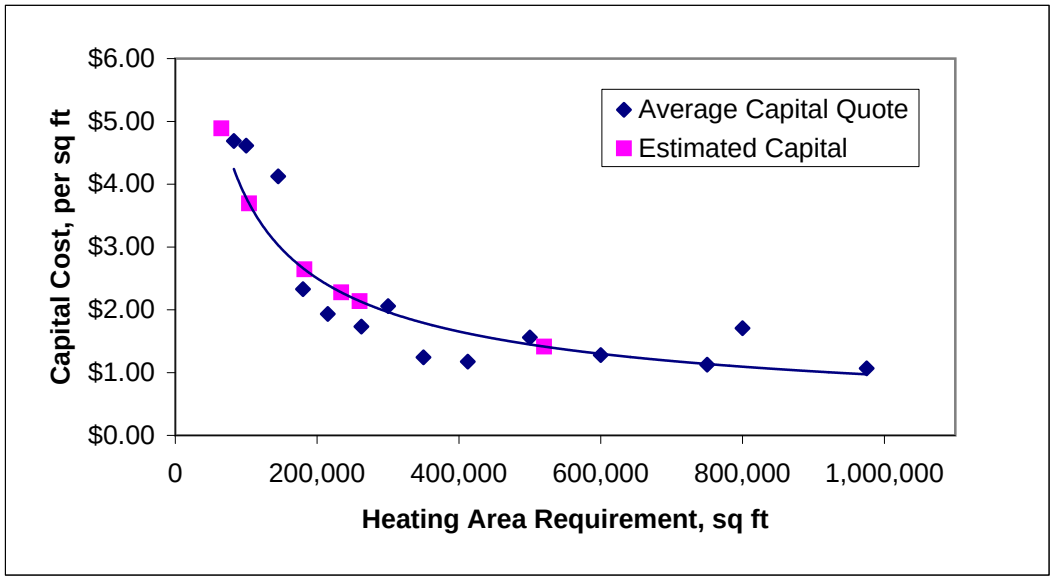

Appendix E.2.D Estimated Full-Scale Combustion System Capital Investment

Company	Quote*	Included
Messersmith	$320,000	Includes combuster, boiler, storage bin, chip handling systems (conveying), cyclone (for particulates), training & start-up, one-piece stack for exhaust, control panel, draft fan.
Hurst	$374,000	Complete system estimate.
Chiptec	$300,000	Fuel receiving and storage system, metering auger, feed system, gasifier, boiler, fan, cyclone, controls, stack and breeching, installed, start-up and training.

*Quotes were for 6-MMBtu systems; enclosure buildings can add $50,000–80,000 depending on system dimensions.

Appendix E.2.E Estimated Full-Scale Gasification System Capital Investment

EERC Experience

System Size, kW	Price, per kW
100	$3,000
200	$2,250
400	$1,500
Industry Average	$1,900

System Requirements			Price, per kW	Capital Estimation
MMBtu	kW	kW Equiv-alent		
5		250	$2,000	$500,000
6		300	$1,800	$540,000
5	300	550	$1,500	$825,000
6	300	600	$1,450	$870,000
	2000	2000	$1,000	$2,000,000
	600	600	$1,450	$870,000
	300	300	$1,800	$540,000

Appendix E.2.F Estimated Piping Capital Investment

Piping = Installed + Shipping

Hot Water Piping Capital Quoted, per 100 ft	
	$1,000
	$2,000
	$5,000
	$1,300
	$2,000
Average	**$2,260**

Steam Piping Capital Quoted, per 100 ft	
	$40,000
	$50,000
Average	**$45,000**

Building	Required Heating Rates, Btu/hr	Shipping cost*
Average Home	65,000	$163
School	520,000	$1,300
Clinic	260,000	$650
Tribal Council Building	234,000	$585
Native Corporation Office	104,000	$260
Grocery Store	182,000	$455
Residential Group (3–4 homes)	227,500	$569
Clinic, Tribal Council Building, Native Corporation Office	598,000	$1,495
General		$1,000
		$2,000
Average		**$848**

*Shipping cost: Calculated as a factor of size, $200–300 per 100,000 Btu/hr

Estimated Capital	Total	(rounded)
Total Est. Installed and Shipped Hot Water Piping Capital, per 100 ft	$3,108	**$3,100**
Total Est. Installed and Shipped Steam Piping Capital, per 100 ft	$45,848	**$46,000**

Scenario	Requirements
A. Wood Furnaces/Boilers	Logs, Wood Chips or Pellets
1. Indoor wood boilers for individual homes' and village buildings' heat	Wood delivery, indoor wood storage, individual loading (automation with pellets) and ash management
2. Small outdoor wood furnaces for individual homes' and village buildings' heat	Wood delivery, storage, individual or service loading (automation with pellets or auger modification for chips) and ash management, minimal hot water piping, heat exchangers for homes/buildings currently heated by forced air
3. Moderate outdoor wood furnaces for multiple (3–4) homes' and village buildings' heat, cannery steam	Wood delivery, storage, service loading (automation with pellets or auger modification for chips) and ash management, moderate hot water piping, heat exchangers for homes/buildings currently heated by forced air
B. Automated combustion system	Wood chips
1. Moderate combustion system for village buildings' heat and cannery steam	Some supervision, ash management, moderate hot water and steam piping, heat exchangers for buildings currently heated by forced air
2. Large-scale combustion system for entire village, i.e. homes' and village buildings' heat and cannery steam	Some supervision, ash management, extensive hot water and steam piping, heat exchangers for homes/buildings currently heated by forced air
A. Gas Production	Wood Chips
I. Wood Combustion 1. Pipe gas to existing fire-tube steam boiler for cannery steam and steam heat for village buildings	Refurbish boiler, some supervision, ash and waste water management, minimal gas piping, moderate steam piping, heat exchangers to convert steam to forced air or hot water heat
2. Pipe gas to existing fire-tube steam boiler for cannery steam and pipe gas to village buildings for heat	Refurbish boiler, some supervision, ash and waste water management, moderate gas piping, gas boilers/furnaces for village buildings
3. Provide gas to entire village, i.e. homes' and village buildings' heat and cannery steam	Refurbish boiler, some supervision, ash and waste water management, extensive gas piping, gas boilers/furnaces for homes and village buildings
B. Gas and Electricity Production	Wood chips
1. Scenario II. A. 1. and electricity supplied to entire village on existing lines (1-phase, 260 kW)	Same as II. A. 1. requirements, microturbine or gas generator, connections to existing power plant
2. Scenario II. A. 2. and electricity supplied to entire village on existing lines (1-phase, 260 kW)	Same as II. A. 2. requirements, microturbine or gas generator, connections to existing power plant
3. Scenario II. A. 3. and electricity supplied to entire village on existing lines (1-phase, 260 kW)	Same as II. A. 3. requirements, microturbine or gas generator, connections to existing power plant
II. Wood Gasification System C. Electricity Production	Wood Chips
1. Electricity for power and heat to entire village, 3-phase, 560kW	Microturbine or gas generator, connections to existing power plant, connection to cannery for steam production, electric boilers/furnaces for homes and village buildings, phase downgrade for homes and village buildings
2. Electricity supplied to entire village on existing lines (3-phase, 560 kW)	Microturbine or gas generator, connections to existing power plant, phase downgrade for homes and village buildings, connection to cannery for steam production (assumes existing lines cannot carry voltage required for electric boilers/furnaces)

3. Electricity supplied to entire village on existing lines (1-phase, 260 kW)	Microturbine or gas generator, connections to existing power plant (only supplies night/down-time power to cannery), phase downgrade for homes and village buildings (assumes existing lines cannot carry voltage required for electric boilers/furnaces)
A. Use 50% fish oil/diesel blend in existing fire-tube boiler for cannery steam and steam heat for village buildings (can be used in conjunction with Senarios I. A. 1-3 and II. C. 2-3)	Fish oil-processing system, storage, some supervision, reburbish boiler, moderate steam piping
B. Use 50% fish oil/diesel blend in existing fire-tube boiler for cannery steam and use blend for heat in village buildings (can be used in conjunction with Senarios I. A. 1-3 and II. C. 2-3)	Fish oil-processing system, storage, some supervision, reburbish boiler, minimal steam piping, fuel delivery
C. Use 50% fish oil/diesel blend in existing fire-tube boiler for cannery steam and use blend for heat in homes and village buildings (can be used in conjunction with Senarios II. C. 2-3)	Fish oil-processing system, storage, some supervision, reburbish boiler, minimal steam piping, fuel delivery

III. Fish Oil

Scenario	Total Capital	Annual Savings	Payback
I. Wood Combustion			
A. Wood Furnaces/Boilers			
1. Indoor wood boilers for individual homes' and village buildings' heat	$272,800	$76,391	2.7
2. Small outdoor wood furnaces for individual homes' and village buildings' heat	$616,600	$17,226	7.8
3. Moderate outdoor wood furnaces for multiple (3–4) homes' and village buildings' heat, cannery	$884,900	$45,400	7.9
B. Automated combustion system			
1. Moderate combustion system for village buildings' heat and cannery steam	$621,700	$13,901	10.0
2. Large-scale combustion system for entire village, i.e. homes' and village buildings' heat and cannery steam	$1,043,700	$71,309	6.5
II. Wood Gasification System			
A. Gas Production			
1. Pipe gas to existing fire-tube steam boiler for cannery steam and steam heat for village buildings	$1,102,000	($32,587)	17.5
2. Pipe gas to existing fire-tube steam boiler for cannery steam and pipe gas to village buildings for heat	$805,033	($2,239)	12.6
3. Provide gas to entire village, i.e. homes' and village buildings' heat and cannery steam	$1,298,700	($72,146)	29.5
B. Gas and Electricity Production			
1. Scenario II. A. 1. and electricity supplied to entire village on existing lines (1-phase, 260 kW)	$1,427,000	$27,845	9.1
2. Scenario II. A. 2. and electricity supplied to entire village on existing lines (1-phase, 260 kW)	$1,130,033	$57,541	7.2
3. Scenario II. A. 3. and electricity supplied to entire village on existing lines (1-phase, 260 kW)	$1,628,700	$106,470	6.4
C. Electricity Production			
1. Electricity for power and heat to entire village, 3-phase, 560kW	$2,317,500	($77,697)	16.6
2. Electricity supplied to entire village on existing lines (3-phase, 560 kW)	$1,120,000	$20,177	9.5
3. Electricity supplied to entire village on existing lines (1-phase, 260 kW)	$790,000	$4,667	11.3
III. Fish Oil			
A. Use 50% fish oil/diesel blend in existing fire-tube boiler for cannery steam and steam heat for village buildings (can be used in conjunction with Senarios I. A. 1-3 and II. C. 2-3)	$602,000	($14,707)	13.4
B. Use 50% fish oil/diesel blend in existing fire-tube boiler for cannery steam and use blend for heat in village buildings (can be used in conjunction with Senarios I. A. 1-3 and II. C. 2-3)	$260,000	$19,493	5.8
C. Use 50% fish oil/diesel blend in existing fire-tube boiler for cannery steam and use blend for heat in homes and village buildings (can be used in conjunction with Senarios II. C. 2-3)	$260,000	$80,090	2.5

Current Utilities Properties & Rates

Diesel	
$3.00	per gal, Alaska average 2006
129,500	Btu/gal
$23.17	per MMBtu

(HEA) Utilitiy Rates	
$0.1210	per kWh, avg
$35.46	per MMBtu, avg
3412	Btu/kWh

Homer Electric Association (HEA)	Residential	Commercial	Industrial
Monthly Fee	$11	$40	$1,200
Regulatory Charge, per kWh	$0.000433	$0.000433	$0.000433
Tier limit, kWh	600	3000	--
Tier price, per kWh	$0.12370	$0.12074	$0.05440
Price over limit, per kWh	$0.13073	$0.10876	
Demand limit, kW	--	10	--
Demand charge, per kW	--	$6.37740	$16.70876

Wood Properties & Equivalent Price

Wood	*Pellets*
20 lb/ft^3	50 lb/ft^3
8100 Btu/lb, dry	8100 Btu/lb, dry
12% moisture, seasoned	5% moisture, seasoned
7128 Btu/lb, wet	7695 Btu/lb, wet

Delivered Form	*Price, per ton**	*Price, per MMBtu*
Logs, cutting and transportation	$55	$3.86
Chips, chipping logs (average)	$96	$6.72
Pellets, densifying chips (average)	$225	$14.63

*Capital and operating included

Fish Oil Properties & Equivalent Price

Moderate (Oil &) Steam	*Large Oil & Steam*	
$ 1.27	$ 0.64	per gal
$ 10.25	$ 5.13	per MMBtu
50%	50%	Blend
$ 2.14	$ 1.82	per gal blend
$ 16.85	$ 14.34	per MMBtu

Factors	
38.8	MJ/kg salmon oil
948	Btu/MJ
2.2	lb/kg
16681	Btu/lb
7.44	lb/gal salmon oil
124030	Btu/gal
50%	Blend
126765	Btu/gal blend

Indoor Wood Boilers	Individual systems → hot water heat → village buildings, homes

	Building Heat Requirements			*Current Conditions*		*Indoor Wood Boiler*	
Structure	Heating Area, sq.ft	Power Required, Btu/hr	Annual Energy Usage, MMBtu/yr	Est. Diesel, gal	Annual Est. Heating Cost	Est. Capital	Amtorized Capital, per year
Average Home	1000	65000	65	591	$1,772	$3,500	$350
Total Residential (70 units)	*70000*	*4550000*	*4550*	*41335*	*$124,006*	*$245,000*	*$24,500*
School	8000	520000	520	4724	$14,172	$7,400	$740
Clinic	4000	260000	260	2362	$7,086	$5,700	$570
Tribal council building	3600	234000	234	2126	$6,377	$5,500	$550
Native corporation office	1600	104000	104	945	$2,834	$4,100	$410
Grocery store	2800	182000	182	1653	$4,960	$5,100	$510
Total Village Buildings	*20000*	*1300000*	*1300*	*11810*	*$35,430*	*$27,800*	*$2,780*
Scenario Total	**90000**	**5850000**	**5850**	**53146**	**$159,437**	**$272,800**	**$27,280**

Factors

65	Btu/hr/sqft, guess
1000	hr/yr heat required, guess
65%	Indoor wood boiler efficiency, logs
70%	Indoor wood boiler efficiency, chips
75%	Indoor wood boiler efficiency, pellets
85%	Diesel boiler/furnace efficency, avg
0.7457	kW/hp
2544	Btu/hr per hp

Indoor Wood Boilers

	Wood (logs)					*Wood (chips)*				
Structure	Est. Wood, tons/yr	Est. Wood Cost/yr	Est. Oper. Cost/yr	Annual Heating Cost	Est. Annual Savings	Est. Wood, tons/yr	Est. Wood Cost/yr	Est. Oper. Cost/yr	Annual Heating Cost	Est. Annual Savings
Average Home	7	$386	$234	$970	$802	7	$386	$471	$1,327	$444
Total Residential (70 units)	*491*	*$27,006*	*$16,367*	*$67,874*	*$56,133*	*456*	*$27,006*	*$32,943*	*$92,903*	*$31,103*
School	56	$3,086	$1,871	$5,697	$8,475	52	$3,086	$3,765	$8,558	$5,615
Clinic	28	$1,543	$935	$3,048	$4,038	26	$1,543	$1,882	$4,479	$2,607
Tribal council building	25	$1,389	$842	$2,781	$3,597	23	$1,389	$1,694	$4,068	$2,310
Native corporation office	11	$617	$374	$1,401	$1,433	10	$617	$753	$1,974	$861
Grocery store	20	$1,080	$655	$2,245	$2,715	18	$1,080	$1,318	$3,246	$1,714
Total Village Buildings	*140*	*$7,716*	*$4,676*	*$15,172*	*$20,258*	*130*	*$7,716*	*$9,412*	*$22,324*	*$13,107*
Scenario Total	**631**	**$34,722**	**$21,044**	**$83,046**	**$76,391**	**586**	**$34,722**	**$42,355**	**$115,227**	**$44,210**

Chipper/Grinder Calculations

Company	West Salem Machinery
Model	3456-Brute (electric stationary)
12	tons/hr, rated
550	Engine hp, avg
$250,000	Estimated delivered capital
$10,870	Amortized Capital (23-yr service life)
$121	Average Home contribution
$966	School contribution
$483	Clinic contribution
$435	Tribal council building contribution
$193	Native corporation office contribution
$338	Grocery store contribution
410	Electricity, kW
49	Hours operation
$25,257	Annual Utility Cost
$43.08	Operating Cost, per ton
$116.63	Woodchip Product Cost, per ton (capital, operating, logging)

Pellet Facility Calculations

4	tons/hr, rated
127	Hours operation
$450,000	Estimated capital
$45,000	Amtorized Capital, per year
$500	Average Home contribution
$4,000	School contribution
$2,000	Clinic contribution
$1,800	Tribal council building contribution
$800	Native corporation office contribution
$1,400	Grocery store contribution
$57	Pellet Operating Cost, per ton
$28,889	Annual Operating Cost
$262.42	Pellet Product Cost, per ton (capital, operating, logging, chipping)

Indoor Wood Boilers

Structure	Est. Wood, tons/yr	Est. Wood Cost/yr	Est. Oper. Cost/yr	Heating Cost	Est. Annual Savings
	Wood (pellets-automated)				
Average Home	6	$386	$611	$1,967	($196)
Total Residential (70 units)	*394*	*$27,006*	*$42,738*	*$137,698*	*($13,692)*
School	45	$3,086	$4,884	$13,677	$495
Clinic	23	$1,543	$2,442	$7,038	$48
Tribal council building	20	$1,389	$2,198	$6,372	$6
Native corporation office	9	$617	$977	$2,997	($163)
Grocery store	16	$1,080	$1,710	$5,038	($78)
Total Village Buildings	*113*	*$7,716*	*$12,211*	*$35,122*	*$308*
Scenario Total	**507**	**$34,722**	**$54,949**	**$172,821**	**($13,384)**

Operational Costs: Wood loading & Ash removal

$5	minimum wage, per hour
270	days/yr heat required, avg
100	lbs/day base wood amount
13.5	tons/yr base wood amount
2	loads/day, logs/chips, avg
5	min/loading for base wood amount, avg
$225	per year loading, logs/chips
2	ash removals/day logs, avg
1.5	ash removals/day chips, avg
1	ash removals/day pellets, avg
5	min/removal from base wood amount, avg
$225	per year ash removal, logs
$169	per year ash removal, chips
$113	per year ash removal, pellets

Small Outdoor Wood Furnaces	Individual systems → hot water heat → village buildings, homes

	Building Heat Requirements			*Current Conditions*		*Outdoor Wood Furnace*	
Structure	Heating Area, sq.ft	Power Required, Btu/hr	Annual Energy Usage, MMBtu/yr	Est. Diesel, gal	Annual Est. Heating Cost	Est. Capital	Amtorized Capital, per year
Average Home	1000	65000	65	591	$1,772	$8,000	$800
Total Residential (70 units)	*70000*	*4550000*	*4550*	*41335*	*$124,006*	*$560,000*	*$56,000*
School	8000	520000	520	4724	$14,172	$14,100	$1,410
Clinic	4000	260000	260	2362	$7,086	$11,700	$1,170
Tribal council building	3600	234000	234	2126	$6,377	$11,300	$1,130
Native corporation office	1600	104000	104	945	$2,834	$9,000	$900
Grocery store	2800	182000	182	1653	$4,960	$10,500	$1,050
Total Village Buildings	*20000*	*1300000*	*1300*	*11810*	*$35,430*	*$56,600*	*$5,660*
Scenario Total	**90000**	**5850000**	**5850**	**53146**	**$159,437**	**$616,600**	**$61,660**

Factors

65	Btu/hr/sqft, guess
1000	hr/yr heat required, guess
$3,100	Installed and shipped hot water piping to each homes/buildings, per 100 ft
45%	Outdoor wood boiler efficiency, logs
50%	Outdoor wood boiler efficiency, chips
55%	Outdoor wood boiler efficiency, pellets
85%	Diesel boiler/furnace efficency, avg
0.7457	kW/hp
2544	Btu/hr per hp

Small Outdoor Wood Furnaces

	Wood (logs)					Wood (chips)				
Structure	Est. Wood, tons/yr	Est. Wood Cost/yr	Est. Oper. Cost/yr	Annual Heating Cost	Est. Annual Savings	Est. Wood, tons/yr	Est. Wood Cost/yr	Est. Oper. Cost/yr	Annual Heating Cost	Est. Annual Savings
Average Home	10	$557	$338	$1,695	$77	9	$557	$551	$2,030	($258)
Total Residential (70 units)	*709*	*$39,009*	*$23,642*	*$118,651*	*$5,356*	*638*	*$39,009*	*$38,604*	*$142,067*	*($18,061)*
School	81	$4,458	$2,702	$8,570	$5,602	73	$4,458	$4,412	$11,246	$2,926
Clinic	41	$2,229	$1,351	$4,750	$2,336	36	$2,229	$2,206	$6,088	$998
Tribal council building	36	$2,006	$1,216	$4,352	$2,025	33	$2,006	$1,985	$5,556	$821
Native corporation office	16	$892	$540	$2,332	$502	15	$892	$882	$2,867	($33)
Grocery store	28	$1,560	$946	$3,556	$1,404	26	$1,560	$1,544	$4,493	$468
Total Village Buildings	*203*	*$11,145*	*$6,755*	*$23,560*	*$11,870*	*182*	*$11,145*	*$11,030*	*$30,251*	*$5,180*
Scenario Total	**912**	**$50,154**	**$30,397**	**$142,211**	**$17,226**	**821**	**$50,154**	**$49,634**	**$172,318**	**($12,881)**

Chipper/Grinder Calculations

Company	West Salem Machinery
Model	3456-Brute (electric stationary)
12	tons/hr, rated
550	Engine hp, avg
$250,000	Estimated delivered capital
$10,870	Amortized Capital (23-yr service life)
$121	Average Home contribution
$966	School contribution
$483	Clinic contribution
$435	Tribal council building contribution
$193	Native corporation office contribution
$338	Grocery store contribution
410	Electricity, kW
68	Hours operation
$25,697	Annual Utility Cost
$31.31	Operating Cost, per ton
$99.55	Woodchip Product Cost, per ton (capital, operating, logging)

Pellet Facility Calculations

4	tons/hr, rated
173	Hours operation
$450,000	Estimated capital
$45,000	Amtorized Capital, per year
$500	Average Home contribution
$4,000	School contribution
$2,000	Clinic contribution
$1,800	Tribal council building contribution
$800	Native corporation office contribution
$1,400	Grocery store contribution
$57	Pellet Operating Cost, per ton
$39,394	Annual Operating Cost
$221.67	Pellet Product Cost, per ton (capital, operating, logging, chipping)

Small Outdoor Wood Furnaces

Structure	Est. Wood, tons/yr	Est. Wood Cost/yr	Est. Oper. Cost/yr	Heating Cost	Est. Annual Savings
	Wood (pellets-automated)				
Average Home	8	$557	$742	$2,720	($949)
Total Residential (70 units)	*538*	*$39,009*	*$51,950*	*$190,413*	*($66,406)*
School	61	$4,458	$5,937	$16,771	($2,599)
Clinic	31	$2,229	$2,969	$8,851	($1,765)
Tribal council building	28	$2,006	$2,672	$8,043	($1,665)
Native corporation office	12	$892	$1,187	$3,972	($1,138)
Grocery store	22	$1,560	$2,078	$6,427	($1,466)
Total Village Buildings	*154*	*$11,145*	*$14,843*	*$44,064*	*($8,633)*
Scenario Total	**691**	**$50,154**	**$66,793**	**$234,476**	**($75,040)**

Operational Costs: Wood loading & Ash removal

$5	minimum wage, per hour
270	days/yr heat required, avg
100	lbs/day base wood amount
13.5	tons/yr base wood amount
2	loads/day, logs/chips, avg
5	min/loading for base wood amount, avg
$225	per year loading, logs/chips
2	ash removals/day logs, avg
1.5	ash removals/day chips, avg
1	ash removals/day pellets, avg
5	min/removal from base wood amount, avg
$225	per year ash removal, logs
$169	per year ash removal, chips
$113	per year ash removal, pellets

Moderate Outdoor Wood Furnaces	Moderate systems → hot water heat → serving multiple community buildings*, homes (3–4)

	Building Heat Requirements			*Current Conditions*		*Outdoor Wood Furnace, Piping*	
Structure	Heating Area, sq.ft	Power Required, Btu/hr	Annual Energy Usage, MMBtu/yr	Est. Diesel, gal	Annual Est. Heating Cost	Est. Capital	Amtorized Capital, per year
Residential Group (3-4 homes)	3500	227500	228	2067	$6,200	$18,950	$1,895
Total Residential (20 groups)	*70000*	*4550000*	*4550*	*41335*	*$124,006*	*$379,000*	*$37,900*
School*	8000	520000	520	4724	$14,172	$14,100	$1,410
Clinic, Tribal council building, Native corporation office	9200	598000	598	5433	$16,298	$21,300	$2,130
Grocery store*	2800	182000	182	1653	$4,960	$10,500	$1,050
Total Village Buildings	*20000*	*1300000*	*1300*	*11810*	*$35,430*	*$45,900*	*$4,590*
Cannery (3, 1.5-units)	--	4500000	3238	25000	$75,000	$210,000	$14,000
Scenario Total	**90000**	**10350000**	**9088**	**78146**	**$234,437**	**$634,900**	**$56,490**

*Small outdoor wood furnaces for each due to location

Factors

65	Btu/hr/sqft, guess
1000	hr/yr heat required, guess
$3,100	Installed and shipped hot water piping to multiple homes/buildings, 100 ft
45%	Outdoor wood boiler efficiency, logs
50%	Outdoor wood boiler efficiency, chips
55%	Outdoor wood boiler efficiency, pellets
85%	Diesel boiler/furnace efficency, avg
75%	Combustion system efficiency
0.7457	kW/hp
2544	Btu/hr per hp

Moderate Outdoor Wood Furnaces

	Wood (logs)					*Wood (chips)*				
Structure	Est. Wood, tons/yr	Est. Wood Cost/yr	Est. Oper. Cost/yr	Annual Heating Cost	Est. Annual Savings	Est. Wood, tons/yr	Est. Wood Cost/yr	Est. Oper. Cost/yr	Annual Heating Cost	Est. Annual Savings
Residential Group (3-4 homes)	35	$1,950	$1,182	$5,028	$1,173	32	$1,950	$1,677	$5,831	$369
Total Residential (20 groups)	*709*	*$39,009*	*$23,642*	*$100,551*	*$23,456*	*638*	*$39,009*	*$33,540*	*$116,625*	*$7,382*
School*	81	$4,458	$2,702	$8,570	$5,602	73	$4,458	$3,833	$10,407	$3,765
Clinic, Tribal council building, Native corporation office	93	$5,127	$3,107	$10,364	$5,934	84	$5,127	$4,408	$12,477	$3,821
Grocery store*	28	$1,560	$946	$3,556	$1,404	26	$1,560	$1,342	$4,199	$761
Total Village Buildings	*203*	*$11,145*	*$6,755*	*$22,490*	*$12,940*	*182*	*$11,145*	*$9,583*	*$27,083*	*$8,348*
Cannery (3, 1.5-units)						303	$12,490	$15,910	$45,330	$29,670
Scenario Total	**912**	**$50,154**	**$30,397**	**$123,041**	**$36,396**	**1124**	**$62,645**	**$59,033**	**$189,037**	**$45,400**

*Small outdoor wood furnaces for each d

Chipper/Grinder Calculations

Company	West Salem Machinery
Model	3456-Brute (electric stationary)
12	tons/hr, rated
550	Engine hp, avg
$250,000	Estimated delivered capital
$10,870	Amortized Capital (23-yr service life)
$309	Average Home contribution
$706	School contribution
$812	Clinic, Tribal council building, Native corp. office
$247	Grocery store contribution
$2,929	Cannery contribution
410	Electricity, kW
94	Hours operation
$26,264	Annual Utility Cost
$23.38	Operating Cost, per ton
$88.05	Woodchip Product Cost, per ton (capital, operating, logging)

Pellet Facility Calculations

4	tons/hr, rated
243	Hours operation
$450,000	Estimated capital
$45,000	Amtorized Capital, per year
$1,245	Average Home contribution
$2,845	School contribution
$3,272	Clinic, Tribal council building, Native corp. office
$996	Grocery store contribution
$57	Pellet Operating Cost, per ton
$55,382	Annual Operating Cost
$191.37	Pellet Product Cost, per ton (capital, operating, logging, chipping)

Moderate Outdoor Wood Furnaces

Structure	Est. Wood, tons/yr	Est. Wood Cost/yr	Wood (pellets) Est. Oper. Cost/yr	Annual Heating Cost	Est. Annual Savings
Residential Group (3-4 homes)	27	$1,950	$2,384	$7,783	($1,583)
Total Residential (20 groups)	*538*	*$39,009*	*$47,685*	*$155,666*	*($31,660)*
School*	61	$4,458	$5,450	$14,869	($697)
Clinic, Tribal council building, Native corporation office	71	$5,127	$6,267	$17,608	($1,310)
Grocery store*	22	$1,560	$1,907	$5,761	($800)
Total Village Buildings	*154*	*$11,145*	*$13,624*	*$38,237*	*($2,807)*
Cannery (3, 1.5-units)	280	$12,490	$24,882	$51,839	$23,161
Scenario Total	**972**	**$62,645**	**$86,192**	**$245,743**	**($11,306)**

*Small outdoor wood furnaces for each d

Operational Costs: Wood loading & Ash removal

$5	minimum wage, per hour
270	days/yr heat required, avg
100	lbs/day base wood amount
13.5	tons/yr base wood amount
2	loads/day, logs/chips, avg
5	min/loading for base wood amount, avg
$225	per year loading, logs/chips
2	ash removals/day logs, avg
1.5	ash removals/day chips, avg
1	ash removals/day pellets, avg
5	min/removal from base wood amount, avg
$225	per year ash removal, logs
$169	per year ash removal, chips
$113	per year ash removal, pellets

Moderate Combustion System	Hot water heat → cannery, village buildings

	Building Heat Requirements			*Current Conditions*		*Combustion System, Piping*	
Structure	Heating Area, sq.ft	Power Required, MMBtu/hr	Annual Energy Usage, MMBtu/yr	Est. Diesel, gal	Annual Est. Heating Cost	Est. Capital	Amtorized Capital, per year
Clinic, Tribal council building, Native corporation office, School, Grocery store	20000	1.3	1300	11810	$35,430	$106,493	$10,649
Cannery	--	4.5	3238	25000	$75,000	$265,207	$26,521
Scenario Total	**20000**	**4.5**	**4538**	**36810**	**$110,430**	**$371,700**	**$37,170**

Factors

65	Btu/hr/sqft, guess
1000	hr/yr heat required, guess
$350,000	Installed capital for 5 MMBtu system
$3,100	Installed and shipped hot water piping to multiple homes/buildings, 100 ft
75%	Combustion system efficiency
85%	Diesel boiler/furnace efficency, avg
0.7457	kW/hp
2544	Btu/hr per hp

Moderate Combustion System

Structure	Est. Wood, tons/yr	Est. Wood Cost/yr	*Woodchips* Est. Oper. Cost/yr	Annual Heating Cost	Est. Annual Savings
Clinic, Tribal council building, Native corporation office, School, Grocery store	122	$6,687	$7,205	$27,656	$7,775
Cannery	303	$16,654	$17,944	$68,874	$6,126
Scenario Total	**424**	**$23,341**	**$25,149**	**$96,529**	**$13,901**

Chipper/Grinder Calculations

Company	West Salem Machinery
Model	3456-Brute (electric stationary)
12	tons/hr, rated
550	Engine hp, avg
$250,000	Estimated delivered capital
$10,870	Amortized Capital (23-yr service life)
$3,114	Village Buildings contribution
$7,755	Cannery contribution
410	Electricity, kW
35	Hours operation
$24,954	Annual Utility Cost
$58.80	Operating Cost, per ton
$139.41	Woodchip Product Cost, per ton (capital, operating, logging)

Operational Costs: Ash removal

$20	wage, per hour
39	wks/yr heat required, avg
0.5	ash removals/wk, avg
30	min/removal from base wood amount, avg
$195	per year ash removal

Large Combustion System	Hot water heat → cannery, village buildings, homes

	Building Heat Requirements			*Current Conditions*		*Combustion System, Piping*	
Structure	Heating Area, sq.ft	Power Required, MMBtu/hr	Annual Energy Usage, MMBtu/yr	Est. Diesel, gal	Annual Est. Heating Cost	Est. Capital	Amtorized Capital, per year
Residential	70000	4.6	4550	41335	$124,006	$397,396	$39,740
Clinic, Tribal council building, Native corporation office, School, Grocery store	20000	1.3	1300	11810	$35,430	$113,542	$11,354
Cannery	--	4.5	3238	25000	$75,000	$282,762	$28,276
Scenario Total	**90000**	**5.9**	**9088**	**78146**	**$234,437**	**$793,700**	**$79,370**

Factors

65	Btu/hr/sqft, guess
1000	hr/yr heat required, guess
$400,000	Installed capital for 6 MMBtu system
$3,100	Installed and shipped hot water piping to multiple homes/buildings, 100 ft
75%	Combustion system efficiency
85%	Diesel boiler/furnace efficency, avg
0.7457	kW/hp
2544	Btu/hr per hp

Large Combustion System

Structure	Est. Wood, tons/yr	Est. Wood Cost/yr	*Woodchips* Est. Oper. Cost/yr	Annual Heating Cost	Est. Annual Savings
Residential	426	$23,405	$13,089	$81,676	$42,330
Clinic, Tribal council building, Native corporation office, School, Grocery store	122	$6,687	$3,740	$23,336	$12,094
Cannery	303	$16,654	$9,313	$58,116	$16,884
Scenario Total	**850**	**$46,746**	**$26,141**	**$163,127**	**$71,309**

Chipper/Grinder Calculations

Company	West Salem Machinery
Model	3456-Brute (electric stationary)
12	tons/hr, rated
550	Engine hp, avg
$250,000	Estimated delivered capital
$10,870	Amortized Capital (23-yr service life)
$5,442	Residential contribution
$1,555	Village Buildings contribution
$3,872	Cannery contribution
410	Electricity, kW
71	Hours operation
$25,751	Annual Utility Cost
$30.30	Operating Cost, per ton
$98.09	Woodchip Product Cost, per ton (capital, operating, logging)

Operational Costs: Ash removal

$20	wage, per hour
39	wks/yr heat required, avg
1	ash removals/wk, avg
30	min/removal from base wood amount, avg
$390	per year ash removal

Moderate Steam (Gas)	Syngas → steam boiler → cannery steam Steam heat → village buildings

	Building Heat Requirements			*Current Conditions*		*Gasification System, Piping*	
Structure	Heating Area, sq.ft	Power Required, MMBtu/hr	Annual Energy Usage, MMBtu/yr	Est. Diesel, gal	Annual Est. Heating Cost	Est. Capital	Amtorized Capital, per year
Clinic, Tribal council building, Native corporation office, School, Grocery store	20000	1.3	1300	11810	$35,430	$244,099	$24,410
Cannery	--	4.5	3238	25000	$75,000	$607,901	$60,790
Scenario Total	**20000**	**4.5**	**4538**	**36810**	**$110,430**	**$852,000**	**$85,200**

Factors

65	Btu/hr/sqft, guess
1000	hr/yr heat required, guess
$500,000	Installed capital for 5 MMBtu system
$10,000	Boiler refurbishing cost
$46,000	Installed and shipped steam piping to village buildings, 100 ft
$1,000	Heat exchanger, guess per 1000 sq. ft. heat required
80%	Gasification system efficiency for gas production
85%	Diesel boiler/furnace efficency, avg
0.7457	kW/hp
2544	Btu/hr per hp

Moderate Steam (Gas)

Structure	Est. Wood, tons/yr	Est. Wood Cost/yr	*Woodchips* Est. Oper. Cost/yr	Annual Heating Cost	Est. Annual Savings
Clinic, Tribal council building, Native corporation office, School, Grocery store	114	$6,260	$7,191	$40,975	($5,544)
Cannery	284	$15,589	$17,908	$102,043	($27,043)
Scenario Total	**398**	**$21,849**	**$25,099**	**$143,018**	**($32,587)**

Chipper/Grinder Calculations

Company	West Salem Machinery
Model	3456-Brute (electric stationary)
12	tons/hr, rated
550	Engine hp, avg
$250,000	Estimated delivered capital
$10,870	Amortized Capital (23-yr service life)
$3,114	Village Buildings contribution
$7,755	Cannery contribution
410	Electricity, kW
33	Hours operation
$24,904	Annual Utility Cost
$144.83	Woodchip Product Cost, per ton (capital, operating, logging)

Operational Costs: Ash removal

$20	wage, per hour
39	wks/yr heat required, avg
0.5	ash removals/wk, avg
30	min/removal from base wood amount, avg
$195	per year ash removal

Moderate Gas & Steam	Syngas → steam boiler → cannery steam Syngas → village buildings for heat

	Building Heat Requirements			*Current Conditions*		*Gas Boiler/Furnace*	
Structure	Heating Area, sq.ft	Power Required, MMBtu/hr	Annual Energy Usage, MMBtu/yr	Est. Diesel, gal	Annual Est. Heating Cost	Est. Capital	Capital, per year
Clinic, Tribal council building, Native corporation office, School, Grocery store	20000	1.3	1300	11810	$35,430	$23,333	$2,333
Cannery	--	4.5	3238	25000	$75,000	--	--
Scenario Total	**20000**	**4.5**	**4538**	**36810**	**$110,430**	**$23,333**	**$2,333**

Factors

65	Btu/hr/sqft, guess
1000	hr/yr heat required, guess
$1.17	per sqft, guess, adjusted for increase shipping to AK
85%	Diesel boiler/furnace efficency, avg
90%	Gas boiler/furnace efficency, avg
$500,000	Installed capital for 5 MMBtu system
$10,000	Boiler refurbishing cost
$3,100	Installed and shipped gas piping to village buildings, 100 ft
80%	Gasification system efficiency for gas production
85%	Diesel boiler/furnace efficency, avg
0.7457	kW/hp
2544	Btu/hr per hp

Moderate Gas & Steam

Structure	*Gasification System, Piping* Est. Capital	Capital, per year	*Woodchips* Est. Wood, tons/yr	Est. Wood Cost/yr	Est. Oper. Cost/yr	Heating Cost	Annual Savings
Clinic, Tribal council building, Native corporation office, School, Grocery store	$164,037	$16,404	119	$6,546	$7,737	$36,373	($943)
Cannery	$367,663	$36,766	267	$14,672	$17,341	$76,296	($1,296)
Scenario Total	**$531,700**	**$53,170**	**386**	**$21,218**	**$25,078**	**$112,669**	**($2,239)**

Chipper/Grinder Calculations

Company	West Salem Machinery
Model	3456-Brute (electric stationary)
12	tons/hr, rated
550	Engine hp, avg
$250,000	Estimated delivered capital
$10,870	Amortized Capital (23-yr service life)
$3,353	Village Buildings contribution
$7,516	Cannery contribution
410	Electricity, kW
32	Hours operation
$24,883	Annual Utility Cost
$147.45	Woodchip Product Cost, per ton (capital, operating, logging)

Operational Costs: Ash removal

$20	wage, per hour
39	wks/yr heat required, avg
0.5	ash removals/wk, avg
30	min/removal from base wood amount, avg
$195	per year ash removal

Large Gas	Syngas → steam boiler → cannery steam Syngas → village buildings, homes for heat

	Building Heat Requirements			*Current Conditions*		*Gas Boiler/Furnace*	
Structure	Heating Area, sq.ft	Power Required, MMBtu/hr	Annual Energy Usage, MMBtu/yr	Est. Diesel, gal	Annual Est. Heating Cost	Est. Capital	Amtorized Capital, per year
Residential	70000	4.6	4550	2067	$6,200	$81,667	$8,167
Clinic, Tribal council building, Native corporation office, School, Grocery store	20000	1.3	1300	11810	$35,430	$23,333	$2,333
Cannery	--	4.5	3238	25000	$75,000	--	--
Scenario Total	**90000**	**5.9**	**9088**	**38877**	**$116,631**	**$105,000**	**$10,500**

Factors

65	Btu/hr/sqft, guess
1000	hr/yr heat required, guess
$1.17	per sqft, guess, adjusted for increase shipping to AK
85%	Diesel boiler/furnace efficency, avg
90%	Gas boiler/furnace efficency, avg
$540,000	Installed capital for 6 MMBtu system
$10,000	Boiler refurbishing cost
$3,100	Installed and shipped gas piping to multiple homes/buildings, 100 ft
80%	Gasification system efficiency for gas production
0.7457	kW/hp
2544	Btu/hr per hp

Large Gas

Structure	*Gasification System, Piping* Est. Capital	Capital, per year	*Woodchips* Est. Wood, tons/yr	Est. Wood Cost/yr	Est. Oper. Cost/yr	Heating Cost	Annual Savings
Residential	$372,000	$37,200	443	$24,344	$13,576	$88,930	($82,729)
Clinic, Tribal council building, Native corporation office, School, Grocery store	$21,700	$2,170	127	$6,955	$3,879	$16,950	$18,481
Cannery	$550,000	$55,000	284	$15,589	$8,694	$82,897	($7,897)
Scenario Total	**$943,700**	**$94,370**	**854**	**$46,888**	**$26,149**	**$188,776**	**($72,146)**

Chipper/Grinder Calculations

Company	West Salem Machinery
Model	3456-Brute (electric stationary)
12	tons/hr, rated
550	Engine hp, avg
$250,000	Estimated delivered capital
$10,870	Amortized Capital (23-yr service life)
$5,643	Residential contribution
$1,612	Village Buildings contribution
$3,614	Cannery contribution
410	Electricity, kW
71	Hours operation
$25,759	Annual Utility Cost
$97.82	Woodchip Product Cost, per ton (capital, operating, logging)

Operational Costs: Ash removal

$20	wage, per hour
39	wks/yr heat required, avg
1	ash removals/wk, avg
30	min/removal from base wood amount, avg
$390	per year ash removal

Moderate Steam & Elect	Syngas → steam boiler → cannery steam Steam heat → village buildings Electricity generation (1-phase, 260 kW)

Current Electricity Conditions

Structure	Building Area, sq.ft	Est. Electricity Usage, kWh/yr	Est. Avg. Electricity Usage, kWh/mth	Est. Avg. Electricity Cost, per month	Est. Annual Electricity Cost
Average Home	1000	14843	1237	$169	$2,028
Total Residential (70 units)	*70000*	*1038977*	*86581*	*$11,831*	*$141,972*
School	8000	118740	9895	$1,239	$14,868
Clinic	4000	59370	4948	$656	$7,869
Tribal council building	3600	53433	4453	$591	$7,090
Native corporation office	1600	23748	1979	$266	$3,196
Grocery store	2800	41559	3463	$461	$5,532
Total Village Buildings	*20000*	*296850*	*24738*	*$3,213*	*$38,555*
Total Village Buildings & Residences	90000	1335827.16	111319	$15,044	$180,527
Cannery	--	664172	221391	$17,684	$53,051
Scenario Total	**--**	**2000000**	**--**	**$32,728**	**$233,579**

Cannery Electricity Usage Calculations

25000	gal diesel annually
3238	MMBtu/yr diesel, 8hr-day
35%	Diesel generator efficiency
332086	kWh/yr diesel, 8hr-day
664172	kWh/yr electricity, 16hr-evening/night
3	mth/yr operation
0.7457	kW/hp
2544	Btu/hr per hp

Moderate Steam & Elect

Structure	*Building Heat Requirements* Power Required, MMBtu/hr	Energy Usage, MMBtu/yr	*Current Heating Conditions* Est. Diesel, gal	Annual Est. Heating Cost	*Gasification System, Piping* Est. Capital	Amtorized Capital, per year
Average Home					$3,677	$368
Total Residential (70 units)					*$257,419*	*$25,742*
School	0.52	520	4724	$14,172	$203,977	$20,398
Clinic	0.26	260	2362	$7,086	$101,989	$10,199
Tribal council building	0.23	234	2126	$6,377	$91,790	$9,179
Native corporation office	0.10	104	945	$2,834	$40,795	$4,080
Grocery store	0.18	182	1653	$4,960	$71,392	$7,139
Total Village Buildings	*1.3*	*1300*	*11810*	*$35,430*	*$509,944*	*$50,994*
Total Village Buildings & Residences	1.3	1300	11810	$35,430	$767,363	$76,736
Cannery	4.5	3238	25000	$75,000	$409,637	$40,964
Scenario Total	**4.5**	**4538**	**36810**	**$110,430**	**$1,177,000**	**$117,700**

Heating Factors

65	Btu/hr/sqft, guess
1000	hr/yr heat required, guess
$1.17	per sqft, guess, adjusted for increase shipping to AK
85%	Diesel boiler/furnace efficency, avg
90%	Gas boiler/furnace efficency, avg
80%	Gasification system efficiency for gas production
$10,000	Boiler refurbishing cost
$46,000	Installed and shipped steam piping to village buildings, 100 ft
$1,000	Heat exchanger, guess per 1000 sq. ft. heat required

Moderate Steam & Elect

	Woodchips				
Structure	Est. Wood, tons/yr	Est. Wood Cost/yr	Est. Oper. Cost/yr	Annual Electricity Cost	Est. Annual Savings
Average Home	18	$1,003	$190	$1,630	$398
Total Residential (70 units)	*1276*	*$70,180*	*$13,318*	*$114,078*	*$27,894*
School	196	$10,807	$2,051	$34,000	($4,960)
Clinic	98	$5,403	$1,025	$17,000	($2,046)
Tribal council building	88	$4,863	$923	$15,300	($1,833)
Native corporation office	39	$2,161	$410	$6,800	($769)
Grocery store	69	$3,782	$718	$11,900	($1,408)
Total Village Buildings	*491*	*$27,017*	*$5,127*	*$85,001*	*($11,016)*
Total Village Buildings & Residences	1767	$97,198	$18,445	$199,079	$16,878
Cannery	1100	$60,476	$11,476	$117,085	$10,966
Scenario Total	**2867**	**$157,674**	**$29,921**	**$316,164**	**$27,845**

Electricity Factors

1.2	KWh/mth/sq.ft estimate
260	kW peak
3412	Btu/kWh
$825,000	Installed capital for 300kW, 5MMBtu system
0.9	MMBtu/hr output required for electricity
17%	Gasification efficiency for electricity production
5.2	MMBtu/hr input needed, peak (260kW)
2.6	MMBtu/hr input needed, low (130kW)
4660	hrs/yr peak
4100	hrs/yr low
35017	MMBtu/yr for electricity
2456	Wood required, tons/yr

Chipper/Grinder Calculations

Company	West Salem Machinery
Model	3456-Brute (electric stationary)
12	tons/hr, rated
550	Engine hp, avg
$250,000	Estimated delivered capital
$10,870	Amortized Capital (23-yr service life)
410	Electricity, kW
239	Hours operation
$29,531	Annual Utility Cost
$69.01	Woodchip Product Cost, per ton

Operational Costs: Ash removal

$20	wage, per hour
39	wks/yr heat required, avg
1	ash removals/wk, avg
30	min/removal from base wood amount, avg
$390	per year ash removal

Moderate Gas, Steam & Elect	Syngas → steam boiler → cannery steam Syngas → village buildings for heat Electricity generation (1-phase, 260 kW)

Current Electricity Conditions

Structure	Building Area, sq.ft	Est. Electricity Usage, kWh/yr	Est. Avg. Electricity Usage, kWh/mth	Est. Avg. Electricity Cost, per month	Est. Annual Electricity Cost
Average Home	1000	14843	1237	$169	$2,028
Total Residential (70 units)	*70000*	*1038977*	*86581*	*$11,831*	*$141,972*
School	8000	118740	9895	$1,239	$14,868
Clinic	4000	59370	4948	$656	$7,869
Tribal council building	3600	53433	4453	$591	$7,090
Native corporation office	1600	23748	1979	$266	$3,196
Grocery store	2800	41559	3463	$461	$5,532
Total Village Buildings	*20000*	*296850*	*24738*	*$3,213*	*$38,555*
Total Village Buildings & Residences	90000	1335827.16	111319	$15,044	$180,527
Cannery	--	664172	221391	$17,684	$53,051
Scenario Total	**--**	**2000000**	**--**	**$32,728**	**$233,579**

Cannery Electricity Usage Calculations

25000	gal diesel annually
3238	MMBtu/yr diesel, 8hr-day
35%	Diesel generator efficiency
332086	kWh/yr diesel, 8hr-day
664172	kWh/yr electricity, 16hr-evening/night
3	mth/yr operation

Moderate Gas, Steam & Elect

Structure	*Building Heat Requirements* Power Required, MMBtu/hr	Energy Usage, MMBtu/yr	*Current Heating Conditions* Est. Diesel, gal	Annual Est. Heating Cost	*Gas Boiler/Furnace* Est. Capital	Amtorized Capital, per year
Average Home						
Total Residential (70 units)						
School	0.52	520	4724	$14,172	$9,333	$933
Clinic	0.26	260	2362	$7,086	$4,667	$467
Tribal council building	0.23	234	2126	$6,377	$4,200	$420
Native corporation office	0.10	104	945	$2,834	$1,867	$187
Grocery store	0.18	182	1653	$4,960	$3,267	$327
Total Village Buildings	*1.3*	*1300*	*11810*	*$35,430*	*$23,333*	*$2,333*
Total Village Buildings & Residences	1.3	1300	11810	$35,430	$23,333	$2,333
Cannery	4.5	3238	25000	$75,000	--	--
Scenario Total	**4.5**	**4538**	**36810**	**$110,430**	**$23,333**	**$2,333**

Heating Factors

65	Btu/hr/sqft, guess
1000	hr/yr heat required, guess
$1.17	per sqft, guess, adjusted for increase shipping to AK
85%	Diesel boiler/furnace efficency, avg
90%	Gas boiler/furnace efficency, avg
80%	Gasification system efficiency for gas production
$10,000	Boiler refurbishing cost
$3,100	Installed and shipped gas piping to village buildings, 100 ft
0.7457	kW/hp
2544	Btu/hr per hp

Moderate Gas, Steam & Elect

	Gasification System, Piping		*Woodchips*				
Structure	Est. Capital	Amtorized Capital, per year	Est. Wood, tons/yr	Est. Wood Cost/yr	Est. Oper. Cost/yr	Annual Electricity Cost	Est. Annual Savings
Average Home	$3,677	$368	18	$1,003	$190	$1,630	$398
Total Residential (70 units)	*$257,419*	*$25,742*	*1276*	*$70,180*	*$13,318*	*$114,078*	*$27,894*
School	$75,857	$7,586	196	$10,807	$2,051	$22,122	$6,918
Clinic	$37,929	$3,793	98	$5,403	$1,025	$11,061	$3,894
Tribal council building	$34,136	$3,414	88	$4,863	$923	$9,955	$3,512
Native corporation office	$15,171	$1,517	39	$2,161	$410	$4,424	$1,606
Grocery store	$26,550	$2,655	69	$3,782	$718	$7,743	$2,750
Total Village Buildings	*$189,644*	*$18,964*	*491*	*$27,017*	*$5,127*	*$55,305*	*$18,681*
Total Village Buildings & Residences	$447,063	$44,706	1767	$97,198	$18,445	$169,383	$46,575
Cannery	$409,637	$40,964	1100	$60,476	$11,476	$117,085	$10,966
Scenario Total	**$856,700**	**$85,670**	**2867**	**$157,674**	**$29,921**	**$286,468**	**$57,541**

Electricity Factors

1.2	KWh/mth/sq.ft estimate
260	kW peak
3412	Btu/kWh
$825,000	Installed capital for 300kW, 5MMBtu system
0.9	MMBtu/hr output required for electricity
17%	Gasification efficiency for electricity production
5.2	MMBtu/hr input needed, peak (260kW)
2.6	MMBtu/hr input needed, low (130kW)
4660	hrs/yr peak
4100	hrs/yr low
35017	MMBtu/yr for electricity
2456	Wood required, tons/yr

Chipper/Grinder Calculations

Company	West Salem Machinery
Model	3456-Brute (electric stationary)
12	tons/hr, rated
550	Engine hp, avg
$250,000	Estimated delivered capital
$10,870	Amortized Capital (23-yr service life)
410	Electricity, kW
239	Hours operation
$29,531	Annual Utility Cost
$69.01	Woodchip Product Cost, per ton

Operational Costs: Ash removal

$20	wage, per hour
39	wks/yr heat required, avg
1	ash removals/wk, avg
30	min/removal from base wood amount, avg
$390	per year ash removal

Large Gas & Elect	Syngas → steam boiler → cannery steam Syngas → village buildings, homes for heat Electricity generation (1-phase, 260 kW)

Current Electricity Conditions

Structure	Building Area, sq.ft	Est. Electricity Usage, kWh/yr	Est. Avg. Electricity Usage, kWh/mth	Est. Avg. Electricity Cost, per month	Est. Annual Electricity Cost
Average Home	1000	14843	1237	$169	$2,028
Total Residential (70 units)	*70000*	*1038977*	*86581*	*$11,831*	*$141,972*
School	8000	118740	9895	$1,239	$14,868
Clinic	4000	59370	4948	$656	$7,869
Tribal council building	3600	53433	4453	$591	$7,090
Native corporation office	1600	23748	1979	$266	$3,196
Grocery store	2800	41559	3463	$461	$5,532
Total Village Buildings	*20000*	*296850*	*24738*	*$3,213*	*$38,555*
Total Village Buildings & Residences	90000	1335827.16	111319	$15,044	$180,527
Cannery	--	664172	221391	$17,684	$53,051
Scenario Total	**--**	**2000000**	**--**	**$32,728**	**$233,579**

Cannery Electricity Usage Calculations

25000	gal diesel annually
3238	MMBtu/yr diesel, 8hr-day
35%	Diesel generator efficiency
332086	kWh/yr diesel, 8hr-day
664172	kWh/yr electricity, 16hr-evening/night
3	mth/yr operation

Large Gas & Elect

	Building Heat Requirements		*Current Heating Conditions*		*Gas Boiler/Furnace*	
Structure	Power Required, MMBtu/hr	Energy Usage, MMBtu/yr	Est. Diesel, gal	Annual Est. Heating Cost	Est. Capital	Amtorized Capital, per year
Average Home	0.07	65	591	$1,772	$1,167	$117
Total Residential (70 units)	*4.6*	*4550*	*41335*	*$124,006*	*$81,667*	*$8,167*
School	0.52	520	4724	$14,172	$9,333	$933
Clinic	0.26	260	2362	$7,086	$4,667	$467
Tribal council building	0.23	234	2126	$6,377	$4,200	$420
Native corporation office	0.10	104	945	$2,834	$1,867	$187
Grocery store	0.18	182	1653	$4,960	$3,267	$327
Total Village Buildings	*1.3*	*1300*	*11810*	*$35,430*	*$23,333*	*$2,333*
Total Village Buildings & Residences	5.9	5850	53146	$159,437	$105,000	$10,500
Cannery	4.5	3238	25000	$75,000	--	--
Scenario Total	**5.9**	**9088**	**78146**	**$234,437**	**$105,000**	**$10,500**

Heating Factors $468,015

65	Btu/hr/sqft, guess
1000	hr/yr heat required, guess
$1.17	per sqft, guess, adjusted for increase shipping to AK
85%	Diesel boiler/furnace efficency, avg
90%	Gas boiler/furnace efficency, avg
80%	Gasification system efficiency for gas production
$10,000	Boiler refurbishing cost
$3,100	Installed and shipped gas piping to multiple homes/buildings, 100 ft guess
0.7457	kW/hp
2544	Btu/hr per hp

Large Gas & Elect

Structure	Gasification System, Piping: Est. Capital	Amtorized Capital, per year	Woodchips: Est. Wood, tons/yr	Est. Wood Cost/yr	Est. Oper. Cost/yr	Annual Electricity Cost	Est. Annual Savings
Average Home	$11,637	$1,164	25	$1,351	$228	$2,940	$860
Total Residential (70 units)	*$814,613*	*$81,461*	*1719*	*$94,561*	*$15,973*	*$205,807*	*$60,171*
School	$59,264	$5,926	196	$10,807	$1,825	$20,137	$8,903
Clinic	$29,632	$2,963	98	$5,403	$913	$10,069	$4,886
Tribal council building	$26,669	$2,667	88	$4,863	$821	$9,062	$4,405
Native corporation office	$11,853	$1,185	39	$2,161	$365	$4,027	$2,003
Grocery store	$20,743	$2,074	69	$3,782	$639	$7,048	$3,445
Total Village Buildings	*$148,161*	*$14,816*	*491*	*$27,017*	*$4,564*	*$50,344*	*$23,642*
Total Village Buildings & Residences	$962,774	$96,277	2211	$121,578	$20,537	$256,151	$83,813
Cannery	$310,926	$31,093	1100	$60,476	$10,215	$105,395	$22,657
Scenario Total	**$1,273,700**	**$127,370**	**3310**	**$182,054**	**$30,752**	**$361,546**	**$106,470**

Electricity Factors

1.2	KWh/mth/sq.ft estimate
260	kW peak
3412	Btu/kWh
$870,000	Installed capital for 300kW, 6MMBtu system
0.9	MMBtu/hr output required for electricity
17%	Gasification efficiency for electricity production
5.2	MMBtu/hr input needed, peak (260kW)
2.6	MMBtu/hr input needed, low (130kW)
4660	hrs/yr peak
4100	hrs/yr low
35017	MMBtu/yr for electricity
2456	Wood required, tons/yr

Chipper/Grinder Calculations

Company	West Salem Machinery
Model	3456-Brute (electric stationary)
12	tons/hr, rated
550	Engine hp, avg
$250,000	Estimated delivered capital
$10,870	Amortized Capital (23-yr service life)
410	Electricity, kW
276	Hours operation
$30,362	Annual Utility Cost
$67.37	Woodchip Product Cost, per ton

Operational Costs: Ash removal

$20	wage, per hour
39	wks/yr heat required, avg
1	ash removals/wk, avg
30	min/removal from base wood amount, avg
$390	per year ash removal

High-Power Electricity, Heat	Electricity generation (3-phase, 560 kW) → heat

Current Electricity Conditions

Structure	Building Area, sq.ft	Est. Electricity Usage, kWh/yr	Est. Avg. Electricity Usage, kWh/mth	Est. Avg. Electricity Cost, per month	Est. Annual Electricity Cost
Average Home	1000	14843	1237	$169	$2,028
Total Residential (70 units)	*70000*	*1038977*	*86581*	*$11,831*	*$141,972*
School	8000	118740	9895	$1,239	$14,868
Clinic	4000	59370	4948	$656	$7,869
Tribal council building	3600	53433	4453	$591	$7,090
Native corporation office	1600	23748	1979	$266	$3,196
Grocery store	2800	41559	3463	$461	$5,532
Total Village Buildings	*20000*	*296850*	*24738*	*$3,213*	*$38,555*
Total Village Buildings & Residences	90000	1335827.16	111319	$15,044	$180,527
Cannery	--	996259	332086	$42,684	$128,051
Scenario Total	**--**	**2332086**	**--**	**$57,728**	**$308,579**

Cannery Electricity Usage Calculations

25000	gal diesel annually
3238	MMBtu/yr diesel, 8hr-day
35%	Diesel generator efficiency
332086	kWh/yr diesel, 8hr-day
664172	kWh/yr electricity, 16hr-evening/night
3	mth/yr operation

High-Power Electricity, Heat

	Building Heat Requirements			*Current Heating Conditions*		*Electric Boiler/Furnace*	
Structure	Power Required, Btu/hr	Power Required, kW	Energy Usage, MMBtu/yr	Est. Diesel, gal	Annual Est. Heating Cost	Est. Capital	Amtorized Capital, per year
Average Home	65000	19	65	591	$1,772	$750	$75
Total Residential (70 units)	*4550000*	*1333*	*4550*	*41335*	*$124,006*	*$52,500*	*$5,250*
School	520000	152	520	4724	$14,172	$6,000	$600
Clinic	260000	76	260	2362	$7,086	$3,000	$300
Tribal council building	234000	69	234	2126	$6,377	$2,700	$270
Native corporation office	104000	30	104	945	$2,834	$1,200	$120
Grocery store	182000	53	182	1653	$4,960	$2,100	$210
Total Village Buildings	*1300000*	*381*	*1300*	*11810*	*$35,430*	*$15,000*	*$1,500*
Total Village Buildings & Residences	5850000	1714	5850	53146	$159,437	$67,500	$6,750
Cannery	--	--	--	--	--	--	--
Scenario Total	**5850000**	**1714**	**5850**	**53146**	**$159,437**	**$67,500**	**$6,750**

Heating Factors

65	Btu/hr/sqft, guess
1000	hr/yr heat required, guess
$0.75	per sqft, guess, adjusted for increase shipping to AK
85%	Diesel boiler/furnace efficency, avg
87%	Gas boiler/furnace efficency, avg
0.7457	kW/hp
2544	Btu/hr per hp

High-Power Electricity, Heat

	Gasification System		*Woodchips*				
Structure	Est. Capital	Amtorized Capital, per year	Est. Wood, tons/yr	Est. Wood Cost/yr	Est. Oper. Cost/yr	Annual Electricity Cost	Est. Annual Savings
Average Home	$16,751	$1,675	45	$2,459	$289	$4,589	($789)
Total Residential (70 units)	*$1,172,579*	*$117,258*	*3129*	*$172,100*	*$20,257*	*$321,238*	*($55,259)*
School	$134,009	$13,401	358	$19,669	$2,315	$36,713	($7,673)
Clinic	$67,004	$6,700	179	$9,834	$1,158	$18,356	($3,402)
Tribal council building	$60,304	$6,030	161	$8,851	$1,042	$16,521	($3,054)
Native corporation office	$26,802	$2,680	72	$3,934	$463	$7,343	($1,312)
Grocery store	$46,903	$4,690	125	$6,884	$810	$12,850	($2,357)
Total Village Buildings	*$335,022*	*$33,502*	*894*	*$49,172*	*$5,788*	*$91,782*	*($17,797)*
Total Village Buildings & Residences	$1,507,601	$150,760	4023	$221,272	$26,044	$413,020	($73,056)
Cannery	$492,399	$49,240	1314	$72,270	$8,506	$132,692	($4,641)
Scenario Total	**$2,000,000**	**$200,000**	**5337**	**$293,542**	**$34,551**	**$545,712**	**($77,697)**

Electricity Factors

1.2	KWh/mth/sq.ft estimate
1714	kW peak
3412	Btu/kWh
$2,000,000	Installed capital for 2.0MW system
5.9	MMBtu/hr output required
17%	Gasification efficiency for electricity production
34	MMBtu/hr input needed, heating peak (1.7MW)
11	MMBtu/hr input needed, cannery peak (560kW)
5.2	MMBtu/hr input needed, alt. peak (260kW)
2.0	MMBtu/hr input needed, low (100kW)
1000	hrs/yr heating peak
593	hrs/yr cannery peak
6422	hrs/yr alternate peak
745	hrs/yr low
76086	MMBtu/yr

Chipper/Grinder Calculations

Company	West Salem Machinery
Model	3456-Brute (electric stationary)
12	tons/hr, rated
550	Engine hp, avg
$250,000	Estimated delivered capital
$10,870	Amortized Capital (23-yr service life)
410	Electricity, kW
445	Hours operation
$34,161	Annual Utility Cost
$63.35	Woodchip Product Cost, per ton

Operational Costs: Ash removal

$20	wage, per hour
39	wks/yr heat required, avg
1	ash removals/wk, avg
30	min/removal from base wood amount, avg
$390	per year ash removal

High-Power Electricity	Electricity generation (3-phase, 560 kW)

		Current Conditions			
Structure	Building Area, sq.ft	Est. Electricity Usage, kWh/yr	Est. Avg. Electricity Usage, kWh/mth	Est. Avg. Electricity Cost, per month	Est. Annual Electricity Cost
Average Home	1000	14843	1237	$169	$2,028
Total Residential (70 units)	*70000*	*1038977*	*86581*	*$11,831*	*$141,972*
School	8000	118740	9895	$1,239	$14,868
Clinic	4000	59370	4948	$656	$7,869
Tribal council building	3600	53433	4453	$591	$7,090
Native corporation office	1600	23748	1979	$266	$3,196
Grocery store	2800	41559	3463	$461	$5,532
Total Village Buildings	*20000*	*296850*	*24738*	*$3,213*	*$38,555*
Total Village Buildings & Residences	90000	1335827.16	111319	$15,044	$180,527
Cannery	--	996259	332086	$42,684	$128,051
Scenario Total	**--**	**2332086**	**--**	**$57,728**	**$308,579**

Cannery Electricity Usage Calculations

25000	gal diesel annually
3238	MMBtu/yr diesel, 8hr-day
35%	Diesel generator efficiency
332086	kWh/yr diesel, 8hr-day
664172	kWh/yr electricity, 16hr-evening/night
3	mth/yr operation
0.7457	kW/hp
2544	Btu/hr per hp

High-Power Electricity

	Gasification System		*Woodchips*				
Structure	Est. Capital	Amtorized Capital, per year	Est. Wood, tons/yr	Est. Wood Cost/yr	Est. Oper. Cost/yr	Annual Electricity Cost	Est. Annual Savings
Average Home	--	--	19	$1,022	$191	$1,836	$193
Total Residential (70 units)	--	--	*1302*	*$71,508*	*$13,377*	*$128,487*	*$13,485*
School	--	--	149	$8,172	$1,529	$14,684	$184
Clinic	--	--	74	$4,086	$764	$7,342	$526
Tribal council building	--	--	67	$3,678	$688	$6,608	$482
Native corporation office	--	--	30	$1,634	$306	$2,937	$259
Grocery store	--	--	52	$2,860	$535	$5,139	$393
Total Village Buildings	--	--	*372*	*$20,431*	*$3,822*	*$36,711*	*$1,845*
Total Village Buildings & Residences	--	--	1674	$91,938	$17,199	$165,197	$15,330
Cannery	--	--	1249	$68,568	$12,827	$123,204	$4,847
Scenario Total	**$870,000**	**$87,000**	**2923**	**$160,506**	**$30,026**	**$288,401**	**$20,177**

Factors

1.2	KWh/mth/sq.ft estimate
560	kW peak
3412	Btu/kWh
$870,000	Installed capital for 600kW system
1.9	MMBtu/hr output required
17%	Gasification efficiency for electricity production
11	MMBtu/hr input needed, peak (560kW)
5.2	MMBtu/hr input needed, alt. peak (260kW)
2.6	MMBtu/hr input needed, low (130kW)
593	hrs/yr peak
5247	hrs/yr alternate peak
2920	hrs/yr low
41666	MMBtu/yr

Chipper/Grinder Calculations

Company	West Salem Machinery
Model	3456-Brute (electric stationary)
12	tons/hr, rated
550	Engine hp, avg
$250,000	Estimated delivered capital
$10,870	Amortized Capital (23-yr service life)
410	Electricity, kW
244	Hours operation
$29,636	Annual Utility Cost
$68.78	Woodchip Product Cost, per ton

Operational Costs: Ash removal

$20	wage, per hour
39	wks/yr heat required, avg
1	ash removals/wk, avg
30	min/removal from base wood amount, avg
$390	per year ash removal

Low-Power Electricity	Electricity generation (1-phase, 260 kW)

Current Conditions

Structure	Building Area, sq.ft	Est. Electricity Usage, kWh/yr	Est. Avg. Electricity Usage, kWh/mth	Est. Avg. Electricity Cost, per month	Est. Annual Electricity Cost
Average Home	1000	14843	1237	$169	$2,028
Total Residential (70 units)	*70000*	*1038977*	*86581*	*$11,831*	*$141,972*
School	8000	118740	9895	$1,239	$14,868
Clinic	4000	59370	4948	$656	$7,869
Tribal council building	3600	53433	4453	$591	$7,090
Native corporation office	1600	23748	1979	$266	$3,196
Grocery store	2800	41559	3463	$461	$5,532
Total Village Buildings	*20000*	*296850*	*24738*	*$3,213*	*$38,555*
Total Village Buildings & Residences	90000	1335827.16	111319	$15,044	$180,527
Cannery	--	664172	221391	$17,684	$53,051
Scenario Total	**--**	**2000000**	**--**	**$32,728**	**$233,579**

Cannery Electricity Usage Calculations

25000	gal diesel annually
3238	MMBtu/yr diesel, 8hr-day
35%	Diesel generator efficiency
332086	kWh/yr diesel, 8hr-day
664172	kWh/yr electricity, 16hr-evening/night
3	mth/yr operation
0.7457	kW/hp
2544	Btu/hr per hp

Low-Power Electricity

Structure	Gasification System: Est. Capital	Gasification System: Amtorized Capital, per year	Woodchips: Est. Wood, tons/yr	Woodchips: Est. Wood Cost/yr	Woodchips: Est. Oper. Cost/yr	Woodchips: Annual Electricity Cost	Woodchips: Est. Annual Savings
Average Home	--	--	18	$1,001	$216	$1,699	$329
Total Residential (70 units)	--	--	*1276*	*$70,074*	*$15,144*	*$118,917*	*$23,055*
School	--	--	146	$8,008	$1,731	$13,591	$1,278
Clinic	--	--	73	$4,004	$865	$6,795	$1,073
Tribal council building	--	--	66	$3,604	$779	$6,116	$974
Native corporation office	--	--	29	$1,602	$346	$2,718	$478
Grocery store	--	--	51	$2,803	$606	$4,757	$776
Total Village Buildings	--	--	*365*	*$20,021*	*$4,327*	*$33,976*	*$4,579*
Total Village Buildings & Residences	--	--	1641	$90,095	$19,471	$152,893	$27,634
Cannery	--	--	816	$44,795	$9,681	$76,018	($22,967)
Scenario Total	**$540,000**	**$54,000**	**2456**	**$134,890**	**$29,152**	**$228,912**	**$4,667**

Factors

1.2	KWh/mth/sq.ft estimate
260	kW peak
3412	Btu/kWh
$540,000	Installed capital for 300kW system
0.9	MMBtu/hr output required
17%	Gasification efficiency for electricity production
5.2	MMBtu/hr input needed, peak (260kW)
2.6	MMBtu/hr input needed, low (130kW)
4660	hrs/yr peak
4100	hrs/yr low
35017	MMBtu/yr

Chipper/Grinder Calculations

Company	West Salem Machinery
Model	3456-Brute (electric stationary)
12	tons/hr, rated
550	Engine hp, avg
$250,000	Estimated delivered capital
$10,870	Amortized Capital (23-yr service life)
410	Electricity, kW
205	Hours operation
$28,762	Annual Utility Cost
$71.05	Woodchip Product Cost, per ton

Operational Costs: Ash removal

$20	wage, per hour
39	wks/yr heat required, avg
1	ash removals/wk, avg
30	min/removal from base wood amount, avg
$390	per year ash removal

Moderate Steam (Oil)	Blend → steam boiler → cannery steam Steam heat → village buildings

	Building Heat Requirements			*Current Conditions*		*Fish Oil System, Piping*	
Structure	Heating Area, sq.ft	Power Required, MMBtu/hr	Annual Energy Usage, MMBtu/yr	Est. Diesel, gal	Annual Est. Heating Cost	Est. Capital	Amtorized Capital, per year
Clinic, Tribal council building, Native corporation office, School, Grocery store	20000	1.3	1300	11810	$35,430	$172,474	$17,247
Cannery	--	4.5	3238	25000	$75,000	$429,526	$42,953
Scenario Total	**20000**	**4.5**	**4538**	**36810**	**$110,430**	**$602,000**	**$60,200**

Factors

65	Btu/hr/sqft, guess
1000	hr/yr heat required, guess
$250,000	Installed capital for fish oil processing system
$10,000	Boiler refurbishing cost
$46,000	Piping installation to village buildings, 100 ft
$1,000	Heat exchanger, guess per 1000 sq. ft. heat required
85%	Diesel boiler/furnace efficency, avg
50%	Fish oil-diesel blend

Moderate Steam (Oil)

Structure	*Fish Oil* Est. gal/yr	Est. Oper. Cost/yr	*50% Blend* Est. Blend, gal	Annual Heating Cost	Est. Annual Savings
Clinic, Tribal council building, Native corporation office, School, Grocery store	6032	$507	12065	$35,852	($422)
Cannery	15023	$1,263	30046	$89,285	($14,285)
Scenario Total	**21056**	**$1,770**	**42111**	**$125,137**	**($14,707)**

Portable Demonstration Unit (AEA-Precision Energy)

50	tons/day oil capability
2.08	tons/hr, assuming 24-hr/day
10%	percent oil required for processing
23395	gal/yr produced for operating
42	hours/yr operating
30	kW processing requirements
$1,770	annual electricity cost
78	ton/yr oil
25%	yield
313	ton fish/yr

Moderate Oil & Steam	Blend → steam boiler → cannery steam Blend → village buildings for heat

	Building Heat Requirements			*Current Conditions*		*Fish Oil System, Piping*	
Structure	Heating Area, sq.ft	Power Required, MMBtu/hr	Annual Energy Usage, MMBtu/yr	Est. Diesel, gal	Annual Est. Heating Cost	Est. Capital	Amtorized Capital, per year
Clinic, Tribal council building, Native corporation office, School, Grocery store	20000	1.3	1300	11810	$35,430	$74,490	$7,449
Cannery	--	4.5	3238	25000	$75,000	$185,510	$18,551
Scenario Total	**20000**	**4.5**	**4538**	**36810**	**$110,430**	**$260,000**	**$26,000**

Factors

65	Btu/hr/sqft, guess
1000	hr/yr heat required, guess
$250,000	Installed capital for fish oil processing system
$10,000	Boiler refurbishing cost
85%	Diesel boiler/furnace efficency, avg
50%	Fish oil-diesel blend

Moderate Oil & Steam

Structure	*Fish Oil* Est. gal/yr	Est. Oper. Cost/yr	*50% Blend* Est. Blend, gal	Annual Heating Cost	Est. Annual Savings
Clinic, Tribal council building, Native corporation office, School, Grocery store	6032	$507	12065	$26,054	$9,377
Cannery	15023	$1,263	30046	$64,883	$10,117
Scenario Total	**21056**	**$1,770**	**42111**	**$90,937**	**$19,493**

Portable Demonstration Unit (AEA-Precision Energy)

50	tons/day oil capability
2.08	tons/hr, assuming 24-hr/day
10%	percent oil required for processing
23395	gal/yr produced for operating
42	hours/yr operating
30	kW processing requirements
$1,770	annual electricity cost
78	ton/yr oil
25%	yield
313	ton fish/yr

Large Oil & Steam	Blend → steam boiler → cannery steam Blend → village buildings, homes for heat

	Building Heat Requirements			*Current Conditions*		*Fish Oil System, Piping*	
Structure	Heating Area, sq.ft	Power Required, MMBtu/hr	Annual Energy Usage, MMBtu/yr	Est. Diesel, gal	Annual Est. Heating Cost	Est. Capital	Amtorized Capital, per year
Residential	70000	4.6	4550	41335	$124,006	$130,179	$13,018
Clinic, Tribal council building, Native corporation office, School, Grocery store	20000	1.3	1300	11810	$35,430	$37,194	$3,719
Cannery	--	4.5	3238	25000	$75,000	$92,627	$9,263
Scenario Total	**20000**	**5.9**	**9088**	**78146**	**$234,437**	**$260,000**	**$26,000**

Factors

65	Btu/hr/sqft, guess
1000	hr/yr heat required, guess
$250,000	Installed capital for fish oil processing system
$10,000	Boiler refurbishing cost
85%	Diesel boiler/furnace efficency, avg
50%	Fish oil-diesel blend

Large Oil & Steam

Structure	Fish Oil Est. gal/yr	Fish Oil Est. Oper. Cost/yr	50% Blend Est. Blend, gal	50% Blend Annual Heating Cost	50% Blend Est. Annual Savings
Residential	21114	$921	42227	$77,280	$46,727
Clinic, Tribal council building, Native corporation office, School, Grocery store	6032	$263	12065	$22,080	$13,351
Cannery	15023	$655	30046	$54,987	$20,013
Scenario Total	**42169**	**$1,839**	**84339**	**$154,347**	**$80,090**

Portable Demonstration Unit (AEA-Precision Energy)

50	tons/day oil capability
2.08	tons/hr, assuming 24-hr/day
10%	percent oil required for processing
46855	gal/yr produced for operating
84	hours/yr operating
30	kW processing requirements
$1,839	annual electricity cost
157	ton/yr oil
25%	yield
627	ton fish/yr

APPENDIX F

STATE EMISSIONS STANDARDS

ALASKA ADMINISTRATIVE CODE
Title 18. Environmental Conservation
Chapter 50. Air Quality Control

Section 10. Ambient Air Quality Standards
Section 15. Air Quality Designations, Classifications, and Control Regions
Section 55. Industrial Processes and Fuel-Burning Equipment
Section 75. Wood-Fired Heating Device Visible Emission Standards

18 AAC 50.010. Ambient Air Quality Standards

The standards for concentrations of air pollutants in the ambient air, measured or predicted by an analytical method described in 18 AAC 50.215, are established as follows:

(1) for PM-10:

(A) expected annual arithmetic mean of 50 micrograms per cubic meter; and

(B) 24-hour average of 150 micrograms per cubic meter, with this standard being attained when the expected number of days in a calendar year with a 24-hour average concentration above 150 micrograms per cubic meter is less than or equal to 1 day;

(2) for sulfur oxides, measured as sulfur dioxide:

(A) annual arithmetic mean of 80 micrograms per cubic meter;

(B) 24-hour average of 365 micrograms per cubic meter not to be exceeded more than once each year; and

(C) 3-hour average of 1300 micrograms per cubic meter not to be exceeded more than once each year;

(3) for carbon monoxide:

(A) 8-hour average of 10 milligrams per cubic meter not to be exceeded more than once each year; and

(B) 1-hour average of 40 milligrams per cubic meter not to be exceeded more than once each year;

(4) for ozone: 1-hour average of 235 micrograms per cubic meter, with this standard being attained when the expected number of days in a calendar year with a minimum hourly average concentration above 235 micrograms per cubic meter is less than or equal to 1 day;

(5) for nitrogen dioxide: annual arithmetic mean of 100 micrograms per cubic meter;

(6) for lead: quarterly arithmetic mean of 1.5 micrograms per cubic meter;

(7) for reduced sulfur compounds, expressed as sulfur dioxide: 30-minute average of 50 micrograms per cubic meter not to be exceeded more than once each year; and

(8) for ammonia: 2.1 milligrams per cubic meter, averaged over any consecutive 8 hours not to be exceeded more than once each year.

History: Eff. 1/18/97, Register 141; am 6/21/98, Register 146; am 10/1/2004, Register 171

Authority: AS 46.03.020

AS 46.14.010

AS 46.14.030

Sec. 30, Ch. 74,

SLA 1993

18 AAC 50.015. Air Quality Designations, Classifications, and Control Regions

(a) To identify an area by its air quality, all geographic areas in the state are designated by the federal administrator as "attainment," "nonattainment," or "unclassifiable." An area is designated "attainment" for a particular air pollutant if its air quality meets the ambient air quality standard for that air pollutant. If air quality does not meet the ambient standard for a particular air pollutant, that area is designated "nonattainment" for that air pollutant. If there is insufficient information to classify an area as attainment or nonattainment for a particular air pollutant, the area is designated "unclassifiable" for that air pollutant.

(b) The following areas have been designated by the federal administrator as "nonattainment" for the specified air pollutants:

(1) for carbon monoxide:

(A) repealed 2/20/2004;

(B) repealed 6/24/2004;

(2) for PM-10:

(A) Mendenhall Valley area of Juneau; and

(B) Eagle River area of Anchorage.

(c) To establish standards for the prevention of significant deterioration of air quality, geographic areas in the state are

(1) divided into four "air quality control regions" as follows:

(A) Cook Inlet Intrastate Air Quality Control Region;

(B) Northern Alaska Intrastate Air Quality Control Region;

(C) South Central Alaska Intrastate Air Quality Control Region; and

(D) Southeast Alaska Intrastate Air Quality Control Region; and

(2) classified as shown in Table 1 in this subsection for each air pollutant for which the area is designated "unclassifiable" or "attainment."

Table 1 Air Quality Classifications

Classification	Geographic Area
Class I areas	Denali National Park including the Denali Wilderness but excluding the Denali National Preserve Bering Sea National Wildlife Refuge designated as a National Wilderness Area Simeon of National Wildlife Refuge designated as a National Wilderness Area Tuxedni National Wildlife Refuge designated as a National Wilderness Area
Class II areas	All other geographic areas in Alaska not classified as Class I or Class III
Class III area	No areas in Alaska

(d) The following areas are subject to maintenance plan requirements for carbon monoxide, as required under 42 U.S.C. 7505a, and as adopted by reference in 18 AAC 50.030 as part of the state air control plan:

(1) the Municipality of Anchorage;

(2) Fairbanks and North Pole urban area.

History: Eff. 1/18/97, Register 141; am 2/20/2004, Register 169; am 6/24/2004, Register 170; am 10/1/2004, Register 171

Authority: AS 46.03.020

AS 46.14.010

AS 46.14.030

Note: The nonattainment area boundaries, the air quality control region boundaries, and the Class I area boundaries are depicted on maps in the state air quality control plan adopted by reference in 18 AAC 50.030. Air quality control region and nonattainment area boundaries are described in 40 C.F.R. 81, as revised as of July 1, 2003.

18 AAC 50.055. Industrial Processes and Fuel-Burning Equipment

(a) Visible emissions, excluding condensed water vapor, from an industrial process or fuel-burning equipment may not reduce visibility through the exhaust effluent by

(1) more than 20 percent averaged over any 6 consecutive minutes, except as provided in (2) - (9) of this subsection;

(2) more than 30 percent averaged over any 6 consecutive minutes for fuel-burning equipment in operation before November 1, 1982, and using more than 20 percent woodwaste as fuel;

(3) more than 55 percent for a urea prilling tower in operation before July 1, 1972, averaged over any six consecutive minutes, nor more than 40 percent, based on a daily 24-hour average of 5-second measurements by continuous opacity monitoring instrumentation approved by the department and that conforms to Performance Specification Number 1 in 40 C.F.R. Part 60, Appendix B, adopted by reference in 18 AAC 50.040;

(4) 20 percent or greater averaged over any 6 consecutive minutes for an asphalt plant constructed or modified after June 11, 1973;

(5) 20 percent or greater averaged over any 6 consecutive minutes for process emissions, other than from a pneumatic cleaner, at a coal preparation plant constructed or modified after November 1, 1982;

(6) 10 percent or greater averaged over any 6 consecutive minutes for a pneumatic cleaner constructed or modified at a coal preparation plant after November 1, 1982;

(7) 10 percent or greater averaged over any 6 consecutive minutes for process emissions, other than from a kiln, at a portland cement plant constructed or modified after November 1, 1982;

(8) 20 percent or greater averaged over any 6 consecutive minutes for a kiln constructed or modified at a portland cement plant after November 1, 1982; and

(9) more than 20 percent for more than 3 minutes in any 1 hour, except for an additional 3 minutes in any 1 hour for a coal burning boiler that began operation before August 17, 1971, if

(A) the visible emissions are caused by startup, shutdown, soot-blowing, grate cleaning, or other routine maintenance specified in an operating permit issued under this chapter;

(B) the owner or operator of the boiler monitors visible emissions by continuous opacity monitoring instrumentation that

(i) conforms to Performance Specification 1 in 40 C.F.R. Part 60, Appendix B, adopted by reference in 18 AAC 50.040; and

(ii) completes one cycle of sampling and analyzing for each successive 15-second period;

(C) the owner or operator of the boiler provides the department with a demonstration that the particulate matter emissions from the boiler allowed by this opacity limit will not cause or contribute to a violation of the ambient air quality standards for PM-10 in 18 AAC 50.010, or cause the maximum allowable increases for PM-10 in 18 AAC 50.020 to be exceeded; and

(D) the federal administrator approves a facility-specific revision to the state implementation plan, required under 42 U.S.C. 7410, authorizing the application of this opacity limit instead of the opacity limit otherwise applicable under this section.

(b) Particulate matter emitted from an industrial process or fuel-burning equipment may not exceed, per cubic foot of exhaust gas corrected to standard conditions and averaged over 3 hours,

(1) 0.05 grains, except as provided in (2) – (6) of this subsection, (d) – (f) of this section, and 18 AAC 50.060;

(2) 0.1 grains for a steam-generating plant fueled by

(A) coal, and in operation before July 1, 1972;

(B) coal, and rated less than 250 million Btu per hour heat input; or

(C) municipal wastes;

(3) 0.1 grains for an industrial process in operation before July 1, 1972, except as provided in (6) of this subsection;

(4) 0.15 grains for fuel-burning equipment in operation before November 1, 1982, and using more than 20 percent woodwaste as fuel;

(5) 0.04 grains for an asphalt plant constructed or modified after June 11, 1973; or

(6) 0.04 grains for a urea prilling tower.

(c) Sulfur-compound emissions, expressed as sulfur dioxide, from an industrial process or from fuel-burning equipment may not exceed 500 ppm averaged over a period of 3 hours, except as provided in (d) – (f) of this section and 18 AAC 50.060.

(d) At a petroleum refinery, emissions from the following sources, constructed or modified after November 1, 1982, may not exceed the following:

(1) for a catalytic cracking unit catalyst regenerator

(A) 1.0 kilogram of particulate matter per 1,000 kilograms of coke burnoff;

(B) 43.0 additional grams of particulate matter per million joules supplemental heat attributable to fuels burned in a catalyst regenerator waste heat boiler; and

(C) 500 ppm carbon monoxide by volume of exhaust gas;

(2) for a sulfur recovery plant rated at more than 20 long tons per day

(A) 250 ppm sulfur dioxide at zero percent oxygen on a dry basis; or

(B) 10 ppm hydrogen sulfide and a total of 300 ppm reduced sulfur compounds, expressed as sulfur dioxide, at zero percent oxygen on a dry basis, if the air pollutants are not oxidized before release to the atmosphere; and

(3) for fuel-burning equipment, a sulfur dioxide concentration, averaged over three hours, equal to whichever of the following is applicable:

(A) for equipment burning only fuel gas, the concentration of uncontrolled emissions that would result from burning fuel gas containing 230 milligrams hydrogen sulfide per dry standard cubic meter;

(B) for fuel-burning equipment that does not burn fuel gas, 500 ppm;

(C) for fuel-burning equipment that burns a combination of fuel gas and other fuels, a concentration based on the allowable emissions in (A) and (B) of this paragraph, prorated by the proportion of fuel gas and other fuels to the total fuel burned in the equipment.

(e) At a coal preparation plant, emissions from the following sources, if constructed or modified after November 1, 1982, may not exceed the following:

(1) for a thermal drying unit, 70 milligrams of particulate matter per cubic meter of exhaust gas at standard conditions; and

(2) for a pneumatic coal-cleaning unit, 40 milligrams of particulate matter per cubic meter of exhaust gas at standard conditions.

(f) At a portland cement plant, emissions from the following sources, if constructed or modified after November 1, 1982, may not exceed the following:

(1) for a clinker cooler, 0.050 kilograms of particulate matter per 1,000 kilograms of feed on a dry basis to the kiln; and

(2) for a kiln, 0.15 kilograms of particulate matter per 1,000 kilograms of feed on a dry basis.

(g) Release of materials other than process emissions, products of combustion, or materials introduced to control pollutant emissions from a stack at a stationary source constructed or modified after November 1, 1982, is prohibited except as authorized by a construction permit, Title V permit, or air quality control permit issued before October 1, 2004.

History: Eff. 1/18/97, Register 141; am 6/21/98, Register 146; am 11/4/99, Register 152; am 5/3/2002, Register 162; am 10/1/2004, Register 171

Authority: AS 46.03.020

AS 46.14.010

AS 46.14.020

AS 46.14.030

Sec. 30, Ch. 74

SLA 1993

18 AAC 50.075. Wood-Fired Heating Device Visible Emission Standards

(a) A person may not operate a wood-fired heating device in a manner that causes

(1) black smoke; or

(2) visible emissions that exceed 50 percent opacity for more than 15 minutes in any 1 hour in an area for which an air quality advisory is in effect under 18 AAC 50.245.

(b) A person may not operate a wood-fired heating device in an area for which the department has declared an air quality episode under 18 AAC 50.245.

(c) In the Mendenhall Valley wood smoke control area identified in 18 AAC 50.025(b) , a person may not violate or cause a violation of a provision of the Code of the City and Borough of Juneau, Alaska, Chapter 36.40, as amended by the provisions of the Ordinance of the City and Borough of Juneau, Alaska, Serial No. 91-52, adopted by reference in 18 AAC 50.030.

History: Eff. 1/18/97, Register 141

Authority: AS 46.03.020

AS 46.14.010

AS 46.14.020

AS 46.14.030

Sec. 30, ch. 74, SLA

1993