National Renewable Energy Laboratory

Site Wind Resource Assessment

Assessing the Resource at Your Site

- Wind maps
- Local airport or weather station for long-term records
- Micro-siting
- Topography
- Tower height and wind shear
- Measurements

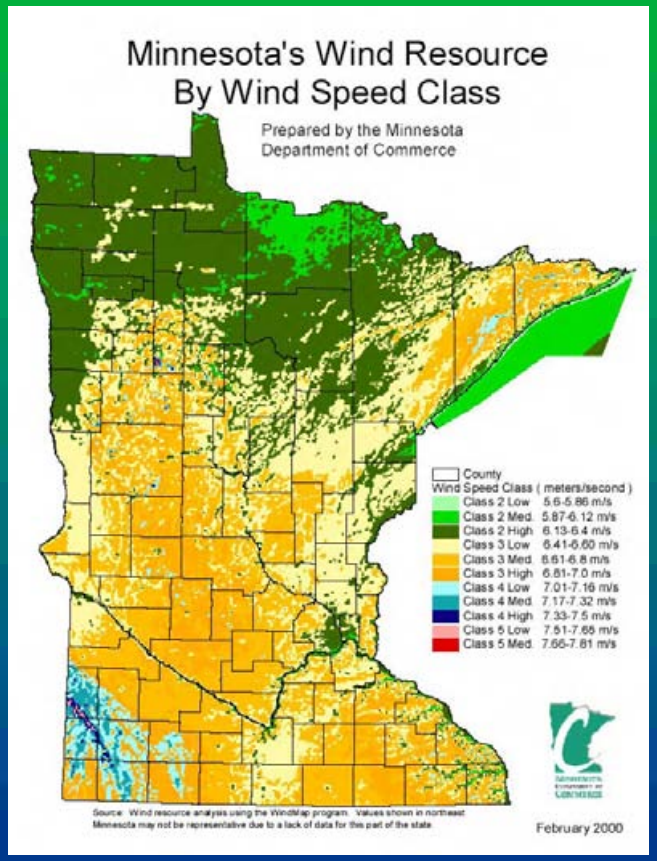

Importance of “Micro-Siting”

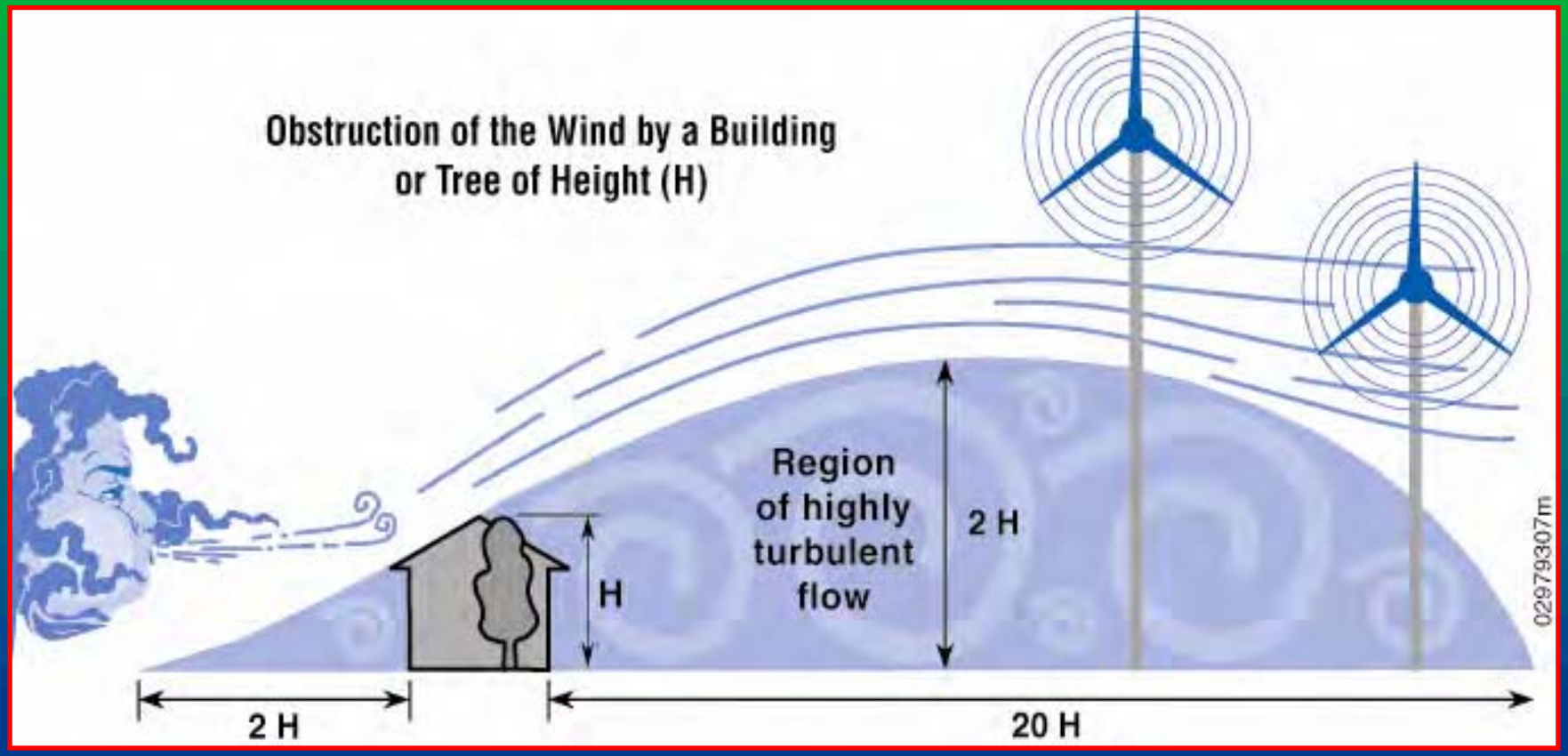

Energy Variation with Terrain

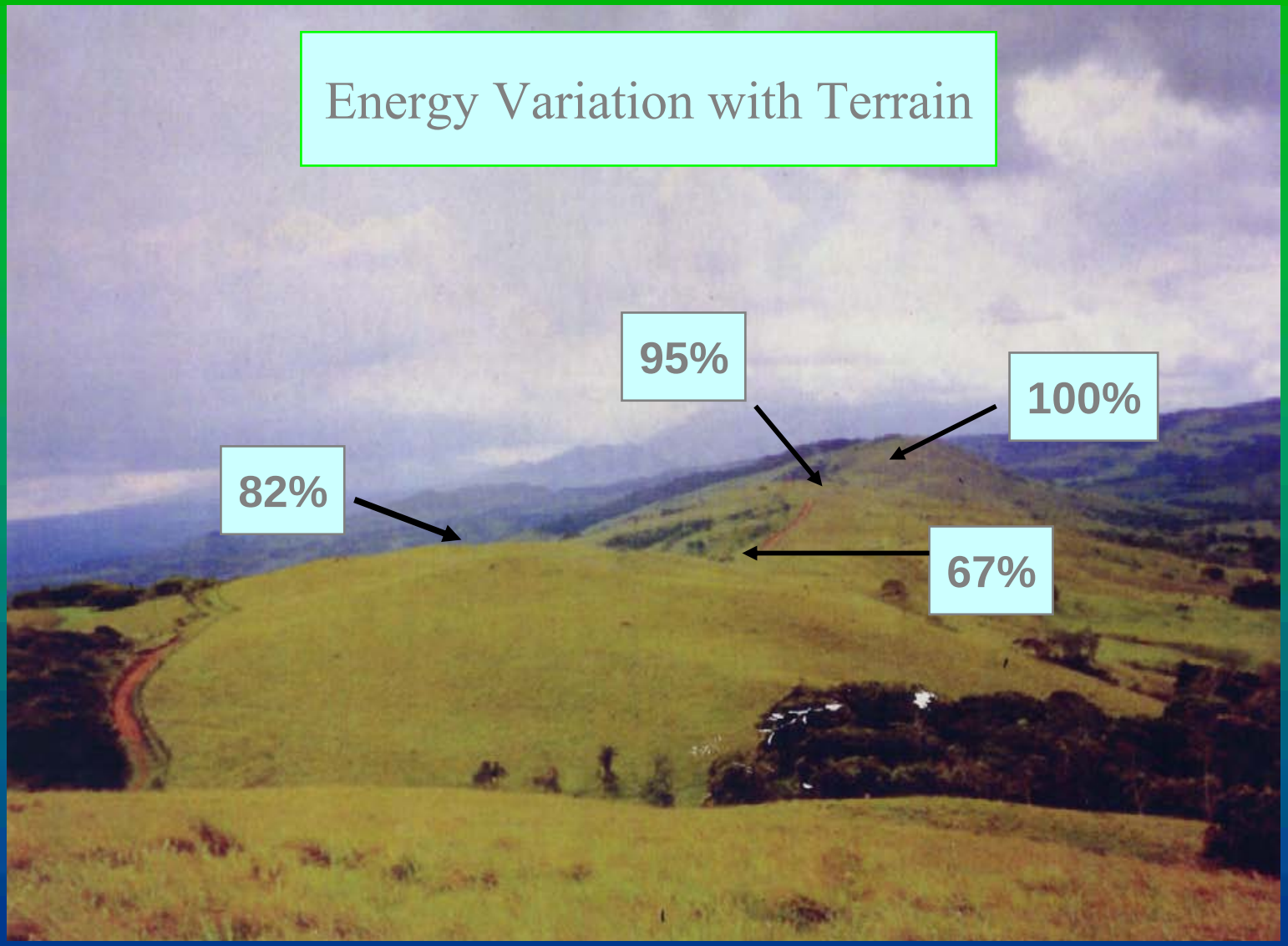

Wind Speed and Power Increase with Height Above the Ground

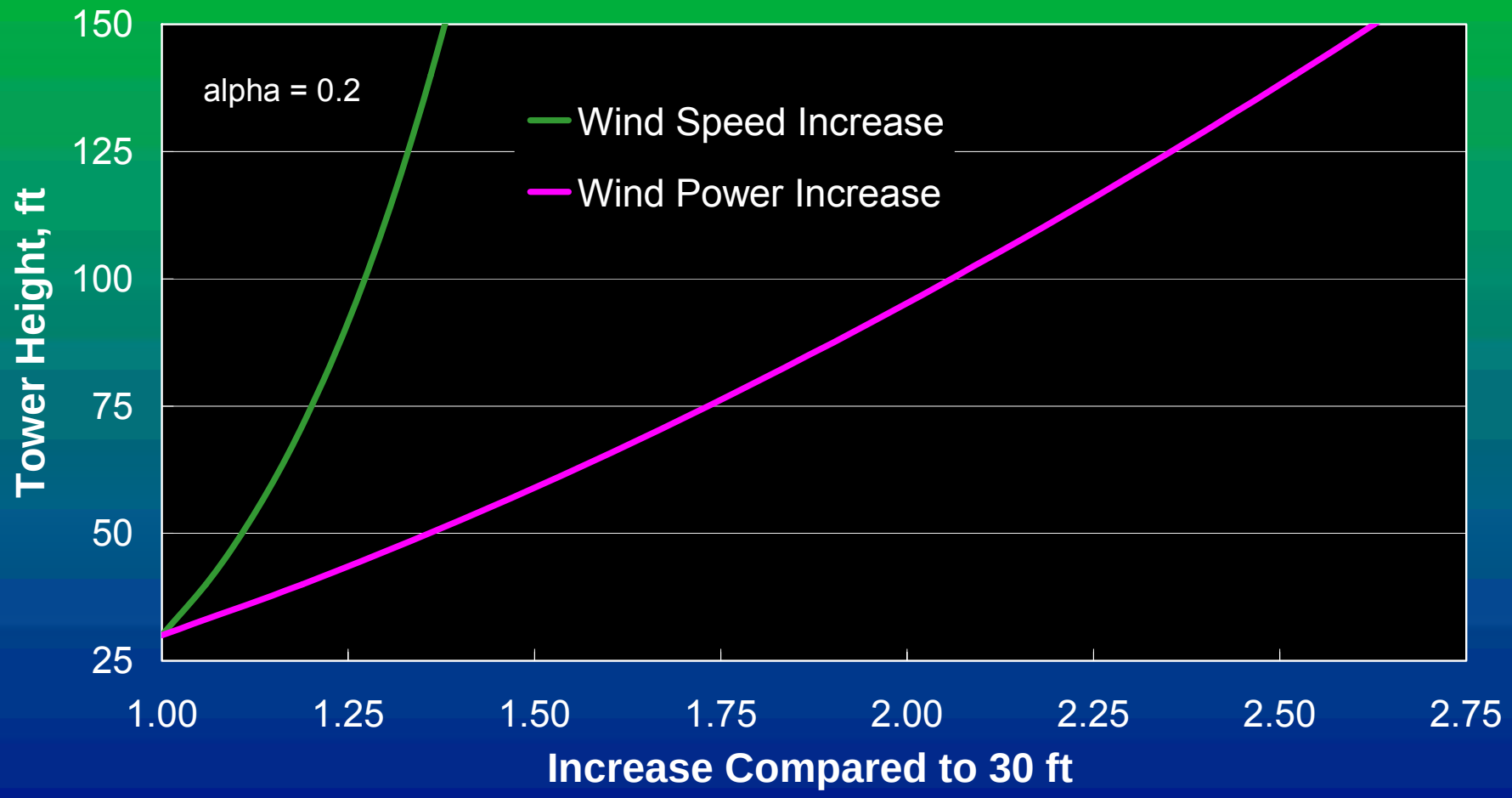

Winds Change with Height – Shear

$$\left[\frac{\text{Speed @ 72 meters}}{\text{Speed @ 40 meters}}\right] = \left[\frac{\text{72 meters}}{\text{40 meters}}\right]^{\alpha}$$

α = Wind Shear Exponent

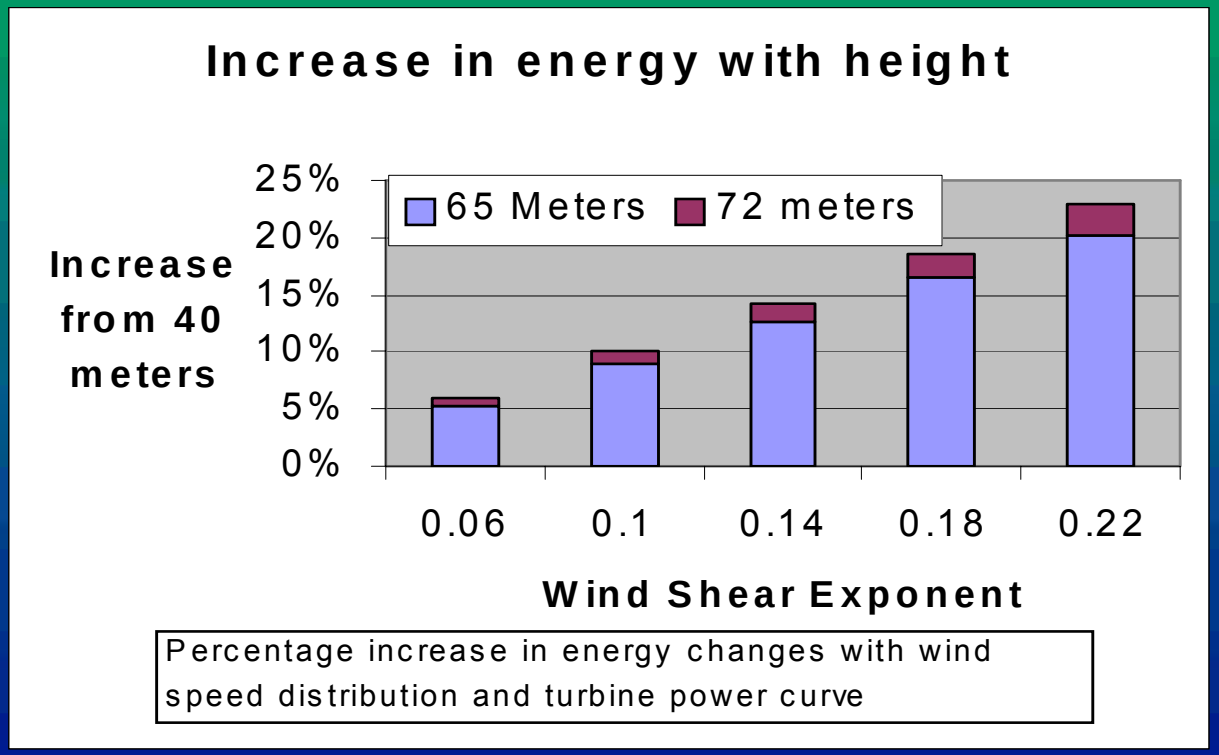

Tubular Guyed Towers

- Limited height
  - Historically 40 meters
  - 50 & 60 meters recently
- Low cost
- Widely used
- Minimal impact on data

NRG 20m TallTower

- Designed specifically for wind energy applications
- Designed as a temporary tower
- Tower is guyed and anchored for support
- Lightning protection system comes standard on all towers

Met Tower Raising

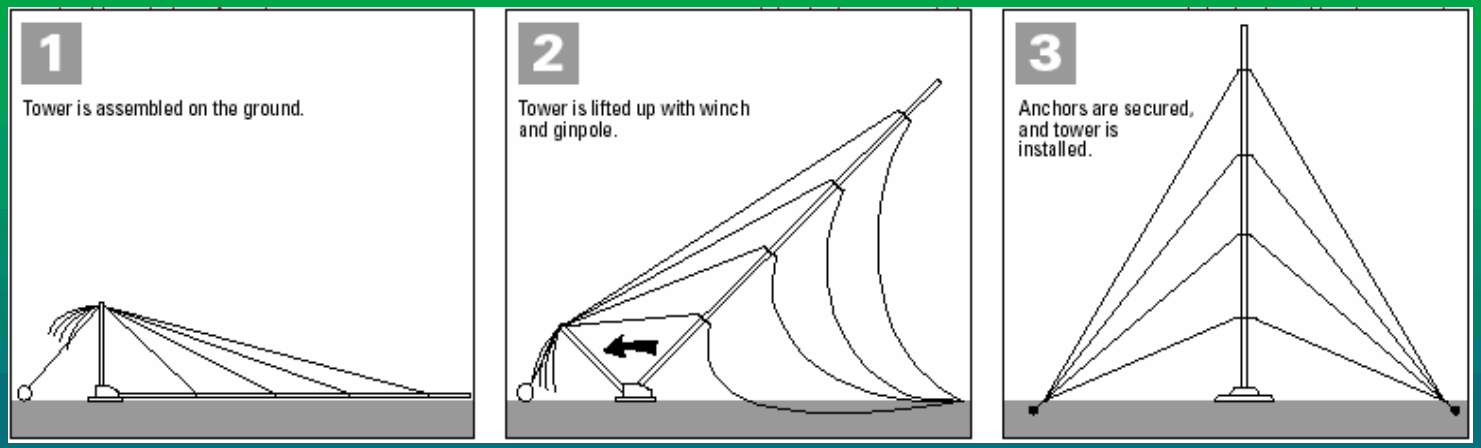

Equipment

- Instruments
  - Anemometer
    - Type?
    - Calibrate?
    - Heated?
    - Cost
  - Wind vane
  - Logger
  - Data transmission
- Mounting

Best Practices for Wind Assessments

- Anemometers located where they represent conditions experienced by turbines
- Data measured at hub height
- High-quality data essential
- Frequent equipment inspections
- Thorough data analysis
- No substitute for long-term, on-site data (one year or more)
- Compare to near-by site with long-term record to assess inter-annual variability

NREL

National Renewable Energy Laboratory

Community Wind Power

Jim Green

National Renewable Energy Laboratory

Revised: Aug05

Small Wind Turbines Are Different

- Utility-Scale Wind Power
  600 - 1,800 kW wind turbines
  - Installed on wind farms, 10 – 300 MW
  - Professional maintenance crews
  - 13 mph (6 m/s) average wind speed
- Small Wind Power
  300 W - 250 kW wind turbines
  - Installed at individual homes, farms, businesses, schools, etc.
  - On the “customer side” of the meter, or off the utility grid entirely
  - High reliability, low maintenance
  - 9 mph (4 m/s) average wind speed

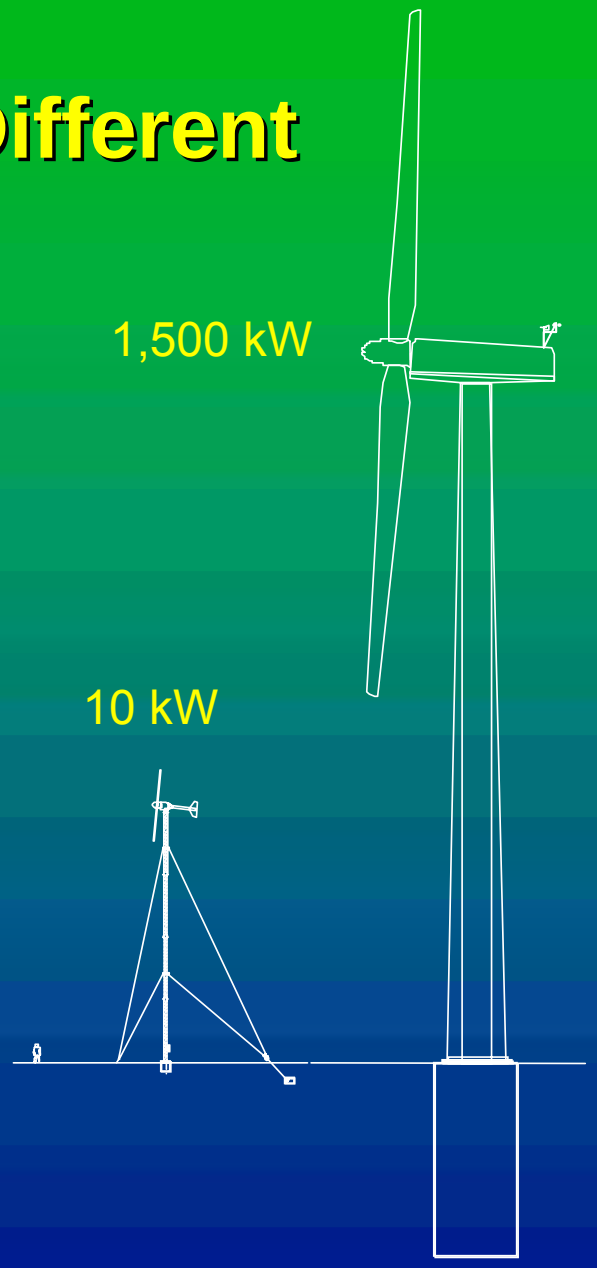

Case Study: On-Grid Small Business

- R&M Mechanical Systems, Norman, Oklahoma
- Net-metering for utility bill reduction
- Bergey Windpower Excel wind turbine, 10 kW, 23-ft rotor, 80-ft tower
- Electricity production, ~15,000 kWh/y
- Utility bill savings, ~$1,300/year
- Installation cost in 1984, ~ $22,000
- $8,000 tax credit and 5-y depreciation
- Maintenance and repair costs, ~$75/y

Case Study: On-Grid Factory

- G.M. Allen & Sons Blueberry processing plant, Orland, Maine
- Net-metering for utility bill reduction
- Atlantic Orient 15/50 wind turbine, 50 kW, 49-ft rotor, 100-ft tower
- Installed cost, ~ $150,000 in 2001

On-Grid Wind System without Storage

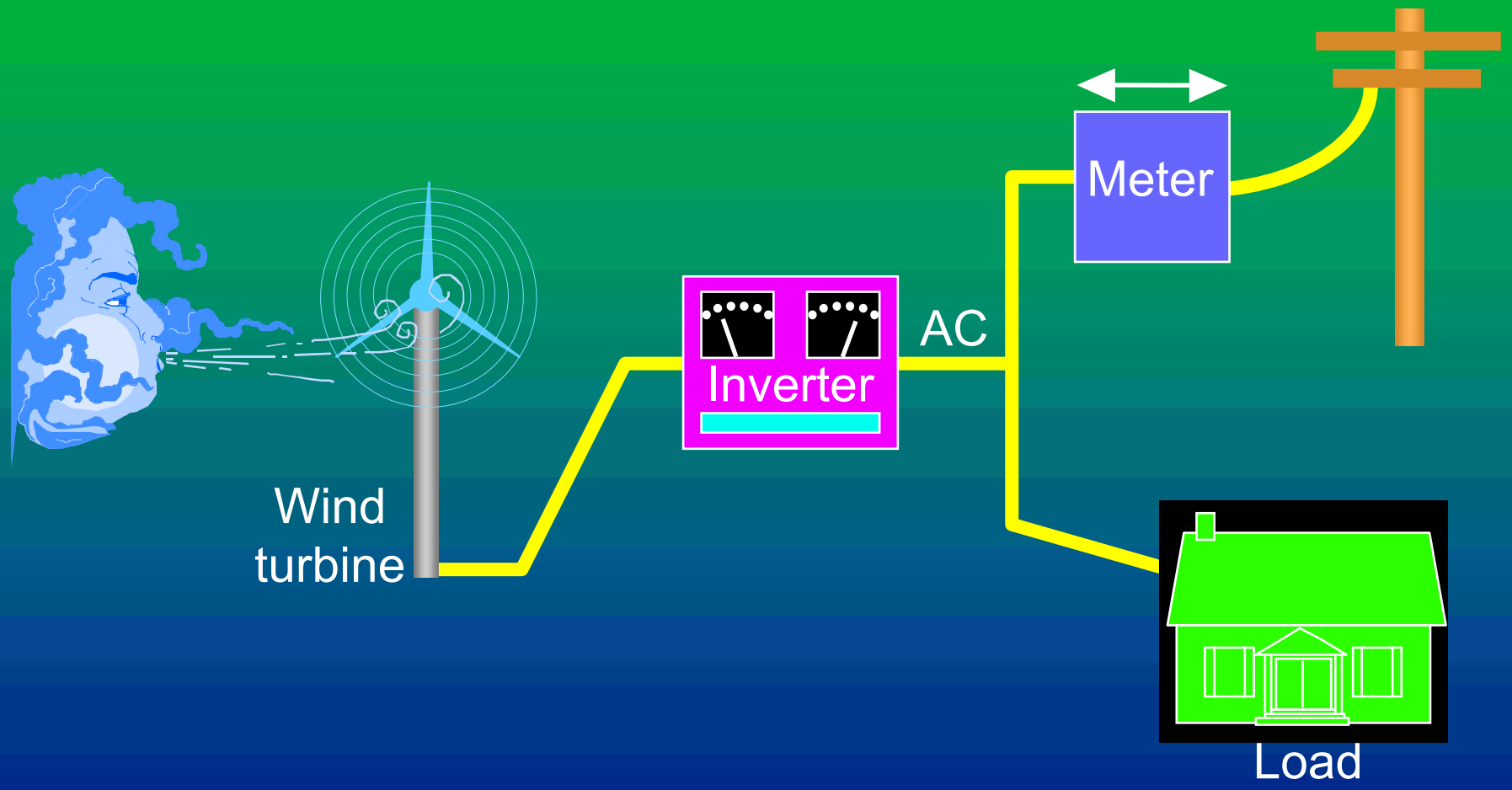

On-Grid Wind System with Storage

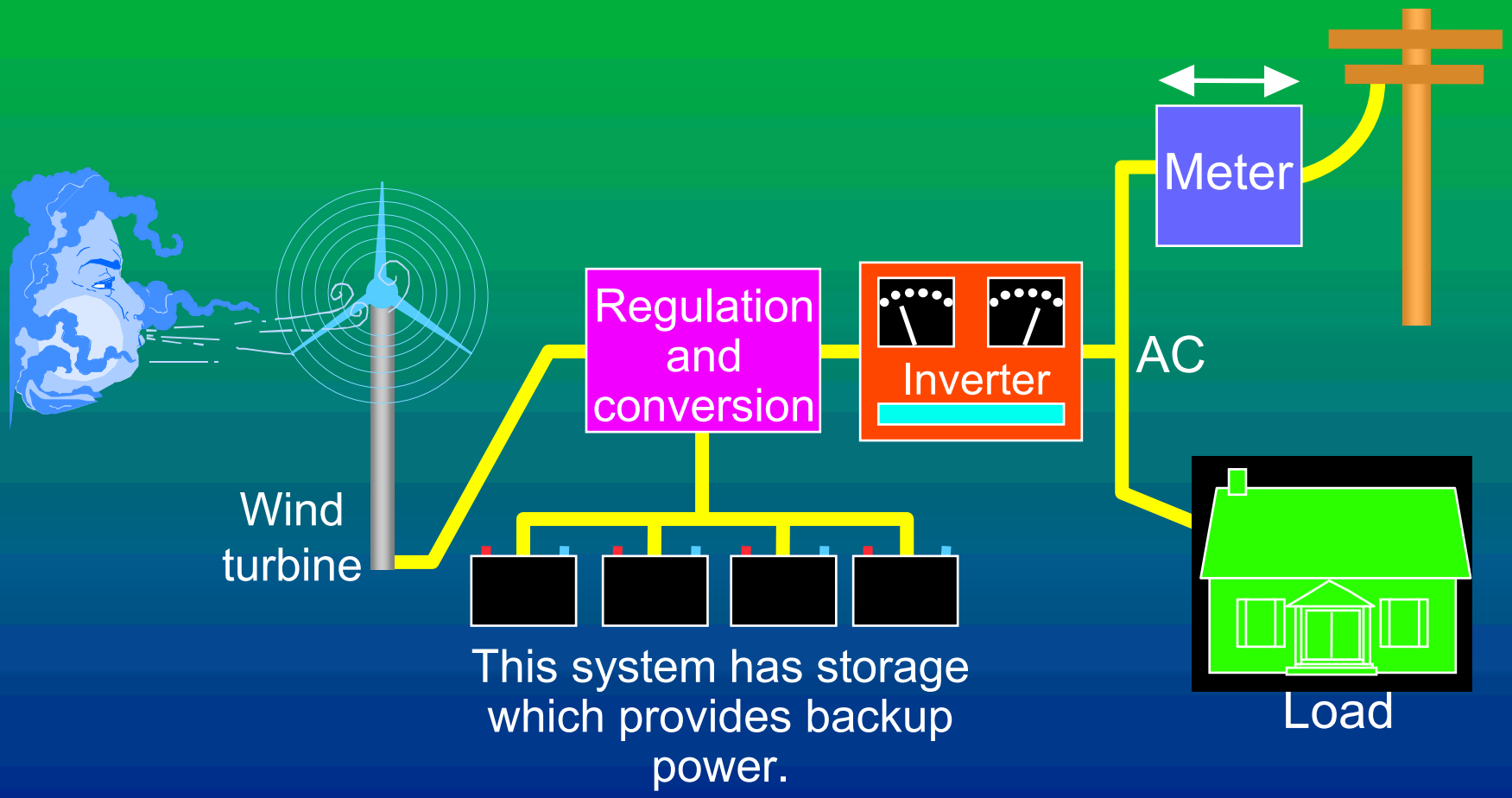

Case Study: Rosebud, SD - Community

- Turbine Owner: Rosebud Sioux Indian Reservation
- Commissioned March 2003, 750 kW NEG/Micon
- PPA: Basin Electric
- Green Tags: sold be Native Energy (www.nativenergy.com) to the US Air Force

Case Study:
AOC 15/50 powers school in Clarion, IA

This AOC 15/50 wind turbine on a farm in Clarion, Iowa save the Clarion-Goldfield Community School about $9,000 per year on electrical purchase and provides a part of the school's science curriculum.

Wubben Case Study - 3 phase grid-connect

- Wubben business - finished wood products for homebuilders
- 3 - 65 kW turbines installed June 2004 (110’ towers)
- Cost - $85k per turbine
  - Payback in 12 years
  - $45k/turbine from WI Focus on Energy
- Generation expected - 256,560 kWh/yr
  Enough energy for 26 homes - 80% of electrical needs of factory

Connecting to the Utility

- PURPA requires utilities to connect small wind systems and purchase power
- Safety & Power Quality – comply with national standards
- Tariff
  - Net metering (single meter)
  - Dual meters
  - Demand charges
- Interconnection Agreement
- Liability insurance

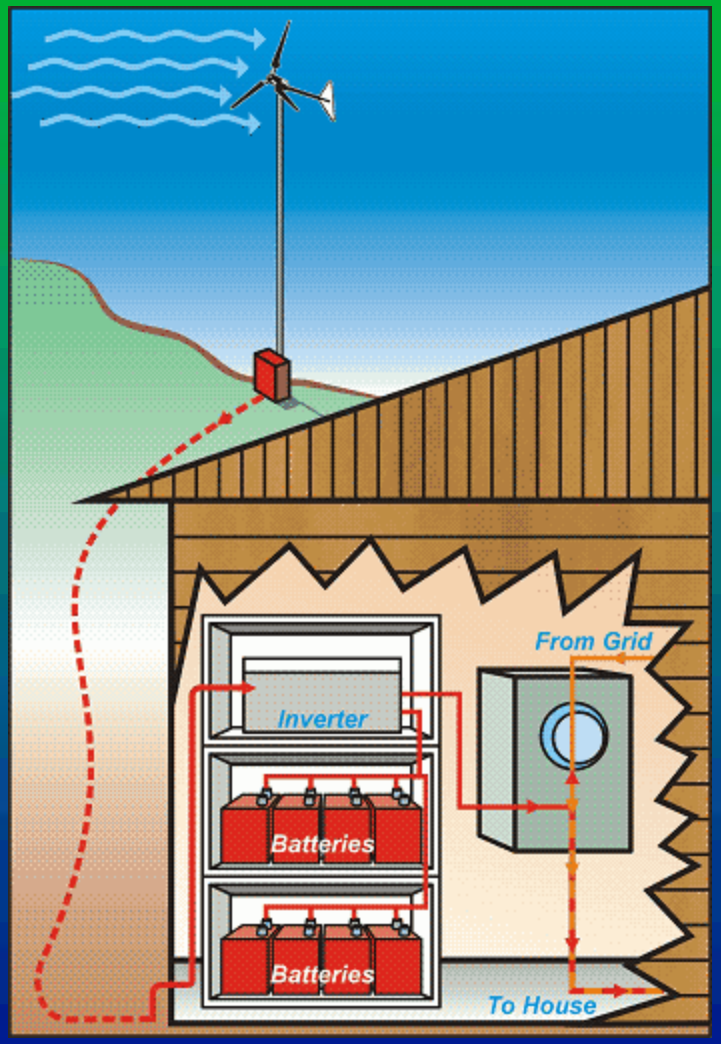

Net Metering of Renewable Energy

- Excess wind power turns the electric meter backward
- Bill is based on the “net” consumption/generation (monthly or annually)

- Net metering of wind energy is available to:
  - All residential customers in 24 states, some residential customers in 11 states

Case Study:
Off-Grid Office and Shop Building

- Wind farm maintenance shop and office, Woodstock, Minnesota
- Electric loads include lighting, PC, and shop tools
- Passive solar day-lighting, corn used for space heat
- Installed cost $6,800 in 2001 (grid extension alternative: $7,500)
- 1200 ft^2 shop, 900 ft^2 office
- Whisper H40 wind turbine, 900 W, 35-ft tower
- PV panels, 500 W
- 24 VDC battery, 750 Ah
- 4-kW inverter, 120 VAC single phase

Case Study: Off-Grid Weekend Cabin

- South Park, Colorado, at 9660 ft
- Southwest Windpower 503 wind turbine, 500 W, 5-ft rotor, 32-ft tower
- Off-grid cabin occupied 2–3 weekends/month
- Space heat from wood & propane
- Propane used for hot water, range, and refrigerator
- PV panels, 188 W
- 24 VDC battery bank
- Heart inverter, 2.5 kW, 120 V AC
- Installed cost in 1986–1992, ~$7500
- Today's cost, ~ $5,000

Southwest Windpower

Flagstaff, Arizona www.windenergy.com

AIR-X
300 W
Battery-Charging

Whisper 200
1000 W
Battery-Charging
Grid-Connect
Water-Pumping

Whisper 100
900 W
Battery-Charging

Whisper 500
3 kW
Battery-Charging

Bergey Windpower

Norman, Oklahoma www.bergey.com

African Windpower

Abundant Renewable Energy, Newberg, Oregon www.abundantre.com

AWP3.6
1 kW
Battery-Charging
Grid-Connect

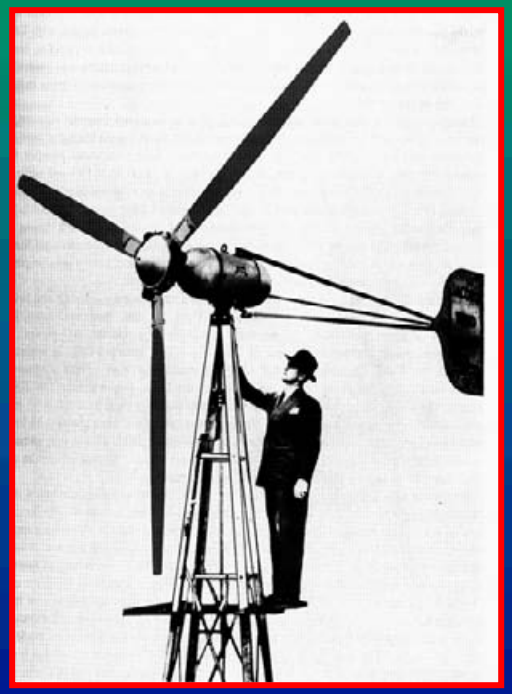

Jacobs (rebuilt)
2.4 and 3.6 kW
Battery-Charging

Proven Engineering Products, Ltd.

Scotland, United Kingdom www.almac.co.uk/proven

WT2500 2.5 kW
Battery-Charging
Grid-Connect

WT600
600 W
Battery-Charging

WT15000
15 kW
Battery-Charging
Grid-Connect

WT6000
6 kW
Battery-Charging
Grid-Connect

Wind Turbine Industries, Inc.

Prior Lake, Minnesota www.windturbine.net

Jacobs 31-20
10 to 20 kW
Grid-Connect

Atlantic Orient Corp.

Nova Scotia, Canada www.atlanticorientcanada.ca

AOC 15/50
50 kW
Grid-Connect

Entegrity Wind Systems, Inc

Prince Edward Island, Canada www.entegritywind.com

EW15
50 kW
Grid-Connect

Fuhrländer

Lorax Energy Systems, Rhode Island www.lorax-energy.com

Energy Maintenance Services

Gary, South Dakota www.energyms.com

E 15

35 kW (1 or 3 phase)
65 kW (3 phase)
Remanufactured
Grid-Connect

How a Wind-Electric Water Pumping System Works

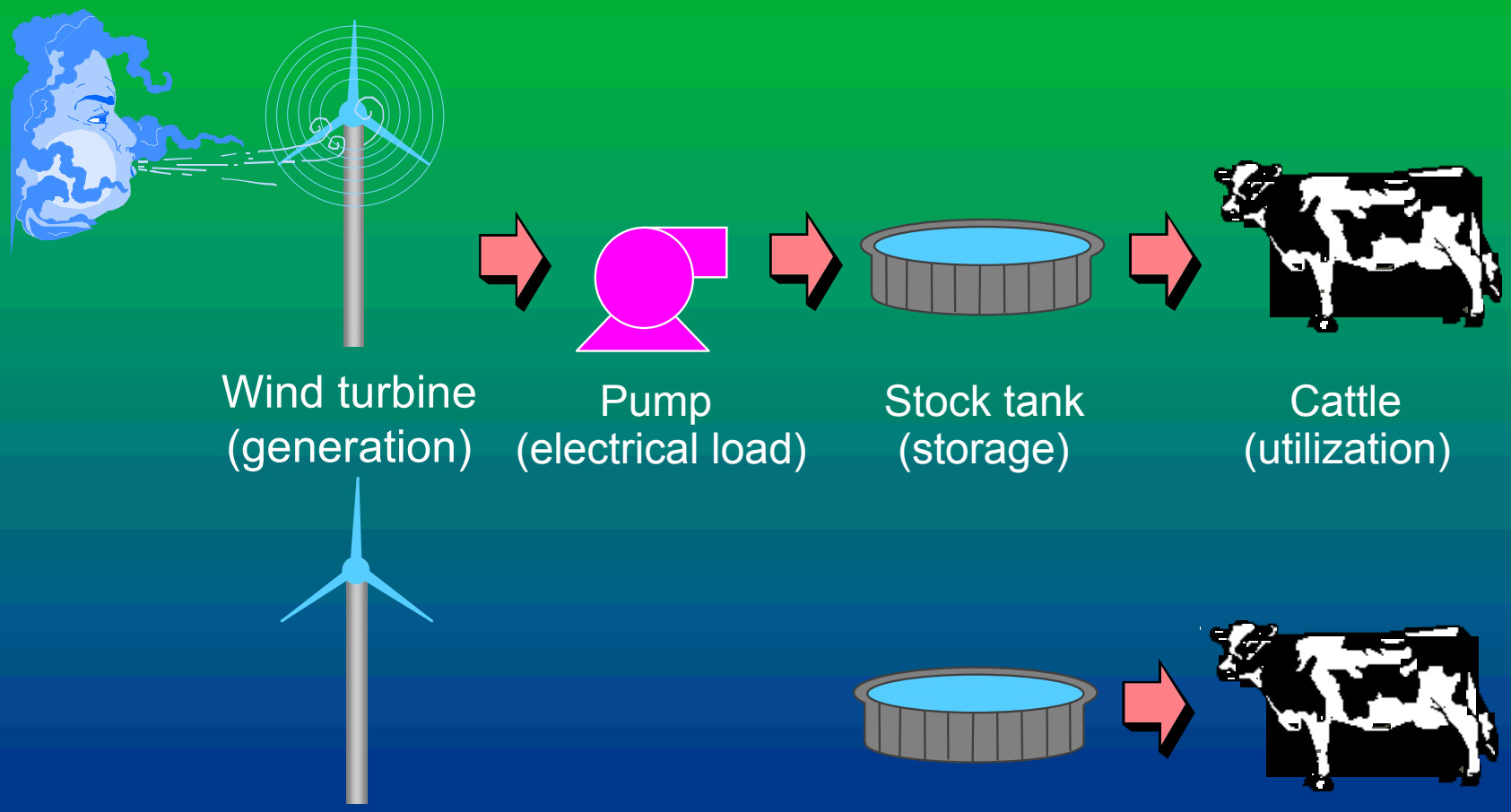

02770328

Windmill and Wind-Electric Systems
(100-Foot Head)

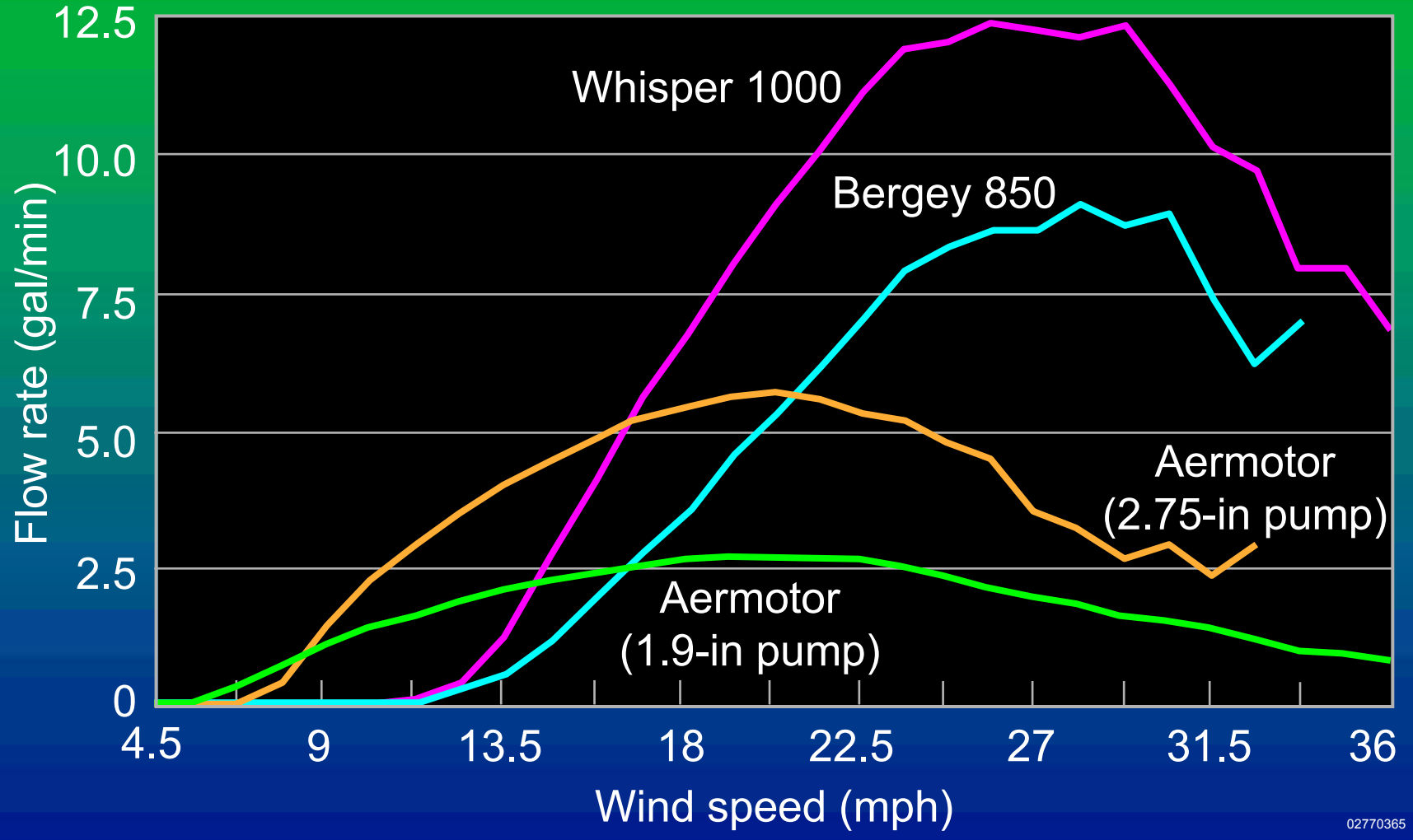

02770365

Case Study: Off-Grid Water-Pumping

- Ranch near Wheeler, Texas
- Water-pumping for 120 head of cattle
- Whisper 1000 wind turbine, 1 kW, 9-ft rotor, 30-ft tower

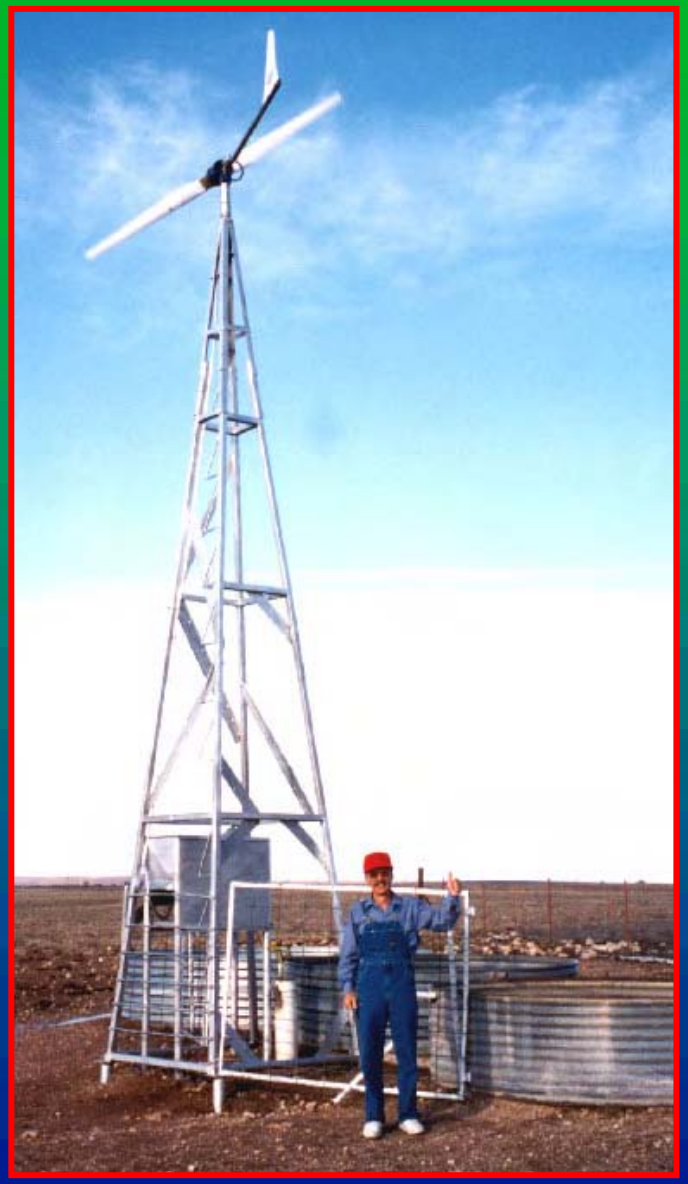

Case Study: Off-Grid Stock Tank Pumping & Heating

- University of Wyoming
- Bergey Windpower 1500 wind turbine, 1500 W, 10-ft rotor

Wind-powered heater maintains pool of open water

Community Wind Can Work For You!

Home

Business

Farm